Hydraulic Unit

5ℓ / 10ℓ Tank

Model CPB /CPD/CPC/CPE
Model CQC/CQE

NEW

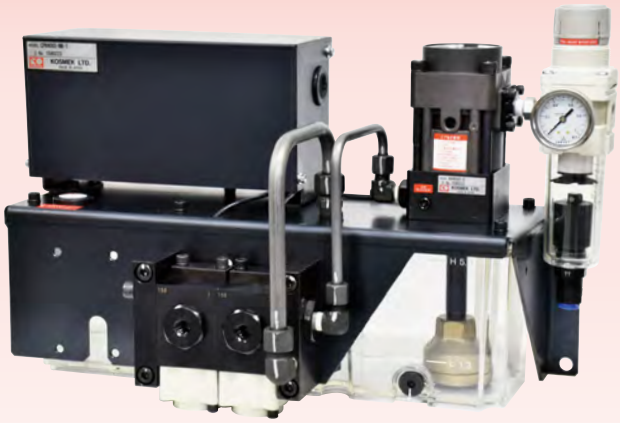

Converts Factory Compressed Air into Hydraulic Pressure.

Compact Hydraulic Unit Composed of Pump, Non-Leak Valve, Pressure Relief Valve, Pressure Switch and Oil Tank

Applicable Clamp Models

GA GD GBB GBE GBC GBF GBP GBQ
RA

Energy Saving

The pump drives (consumes the air pressure) only during pressurization. After the pressurization, air pressure and hydraulic pressure reach equilibrium and the pump stops.
Air consumption is zero after the pressurization is completed.

Maintains Hydraulic Pressure with Non-Leak Valve

Non-leak valve (BA valve) maintains hydraulic pressure even when air supply is stopped preventing the die from falling.

Maintains Set Pressure with Pressure Relief Valve ※ Only when selecting the pressure relief valve.

The set pressure: 25MPa is maintained by the pressure relief valve (BR valve) even when hydraulic pressure rises during the press machine operation.

Pressure Supply when Hydraulic Pressure Decreases

The pump drives and supplies pressure when the hydraulic pressure in the circuit decreases because of the temperature reduction etc. This ensures a constant clamping force.

A Wide Range of Variations

Select a tank from 5ℓ and 10ℓ and a pump from four variations for the most suitable hydraulic unit according to the clamp system.

Model No. Indication

C P B M 0 0 0 - 2GH - 1 - □

1 2 3 4 5 6 7 8

1 Unit

P : For Small/Medium Clamp (5 ℓ Tank)
Q : For Large Clamp (10 ℓ Tank)

Notes :
1. Only 2 Pump Model **C** : AC pump and **E** : AE pump can be installed on **Q** : For Large Clamp Unit (10 ℓ Tank).
2. Please refer to Model CP/CR (P.071) for 2 ℓ Tank.

2 Pump Model

B : AB Pump
D : AD Pump
C : AC Pump
E : AE Pump

Note :
1. **B** : AB Pump and **D** : AD Pump can be selected only when selecting 1 Unit **P** : For Small/Medium Clamp (5 ℓ Tank).

Pump Performance Curve

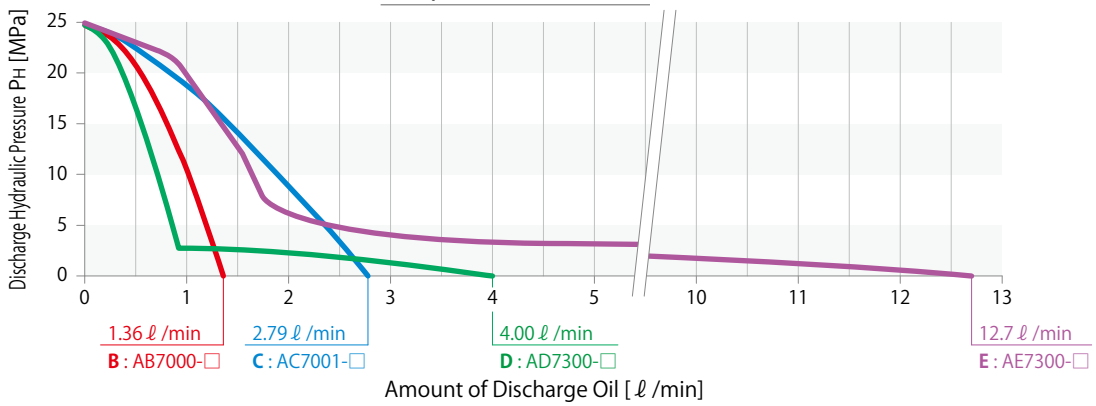

3 Pressure Code

M : Working Pressure 25MPa, Pressure Switch Set Pressure INC. 17.6MPa, DEC. 2.94MPa
N : Working Pressure 25MPa, Pressure Switch Set Pressure INC. 17.6MPa, DEC. 2.94MPa with Pressure Relief Valve ※1

4 Fluid Code

0 : General Hydraulic Oil
G : Water•Glycol (Iron Tank)
S : Silicon Oil
F : Fatty Acid Ester

5 Design No.

0 : Revision Number

6 Circuit Symbol (Indicate with the number of circuits and circuit symbol.)

G : For Clamp Single Solenoid Valve
H : For Die Lifter Single Solenoid Valve
R : With Pressure Relief Valve ※1

Notes :
※1. Select the hydraulic unit with pressure relief valve when using hydraulic clamps under high temperature or large temperature change since there may be pressure fluctuation caused by temperature change.
1. For **R** : Pressure Relief Valve 3 Pressure Code is "**N**".

7 Voltage Code

1 : AC100V (50/60Hz)
2 : AC200V (50/60Hz)
3 : AC110V (50/60Hz)
4 : AC220V (50/60Hz)
5 : DC24V

8 Option

Blank : Standard
C : +Common
D : Digital Pressure Sensor
E : Without Filter Regulator
F : Manual-Drain Filter Regulator
G : With Primary Pressure Gauge
H : With Piping Block on the Left
J : With Air Regulator
K0 : With Pressure Gauge for Each Circuit (Without Primary Pressure Gauge)
K1 : With Color Displayed Pressure Gauge for Each Circuit (Without Primary Pressure Gauge)
KG0 : With Pressure Gauge for Each Circuit (With Primary Pressure Gauge)
KG1 : With Color Displayed Pressure Gauge for Each Circuit (With Primary Pressure Gauge)
L : With Pressure Switch Light
N : Piping Port NPT Thread, Pressure Gauge in both PSI/MPa ※2
P : Pressure Gauge in both PSI/MPa
Q0 : With Oil Level Switch (ON when Oil Level Drops)
Q1 : With Oil Level Switch (OFF when Oil Level Drops)
T : Iron Tank (CP□□: only 5 ℓ tank can be selected.) ※3

Notes:
※2. When selecting 8 Option N: Piping Port NPT Thread, dimensions in the specification sheet and other documents are in inches.
※3. Iron Tank is the standard option for CQ□□:10 ℓ Tank.
1. Please contact us for specifications and external dimensions for these options.
2. The external dimensions for five circuits and six circuits are different. Please contact us for detail.

Specifications

Model No.			CPBM	CPBN	CPDM	CPDN	CPCM	CPCN	CPEM	CPEN	CQCM	CQCN	CQEM	CQEN
Working Hydraulic Pressure MPa			25											
Withstanding Pressure MPa			37											
Tank Capacity ℓ			5ℓ (Actual Amount for Use 3.7ℓ : H.L.5ℓ -L.L.1.3ℓ) ※1								10ℓ (Actual Amount for Use 7ℓ : H.L.10ℓ -L.L.3ℓ)			
Operating Temperature ℃			0 ~ 70											
Use Frequency			20 Cycles / Day or less Pressure Rising Time : Less than 2.5 min. / Cycle											
Main Components	Pump	Model No.	AB7000-□		AD7300-□		AC7001-□		AE7300-□		AC7001-□		AE7300-□	
		Set Discharge Pressure MPa	25	22.5	25	22.5	25	22.5	25	22.5	25	22.5	25	22.5
		Discharge Oil under No Load ℓ/min	1.36	1.32	4.00	3.74	2.79	2.70	12.7	12.5	2.79	2.70	12.7	12.5
		Set Air Pressure MPa	0.45	0.41	0.45	0.41	0.47	0.43	0.47	0.43	0.47	0.43	0.47	0.43
		Air Consumption m^3(normal)/min	max. 0.4		max. 0.4		max. 1.0		max. 1.0		max. 1.0		max. 1.0	
	Suction Filter	Model No.	JF1030		JF1030		JF1030		JF1040		JF1030		JF1040	
		Filtration Degree	174μm (100 Mesh)											
	Non-Leak Valve	Model No.	BA5011-0	BA5011-0 BA5R11-0	BA5011-0	BA5011-0 BA5R11-0	BA5011-0	BA5011-0 BA5R11-0	BA5011-0 -Z00101	BA5011-0 -Z00101 BA5R11-0 -Z00102	BA5001-0	BA5001-0 BA5R01-0	BA5001-0 -Z00107	BA5001-0 -Z00107 BA5R01-0 -Z00108
	Pressure Switch (For Clamp)	Model No.	JBA2700-0G											
		Operation Mode/Set Pressure MPa	Pressure Increase Detection / INC. 17.6											
	Pressure Switch (For Die Lifter)	Model No.	JBA0700-0G											
		Operation Mode/Set Pressure MPa	Pressure Decrease Detection / DEC. 2.94											
	Pressure Relief Valve	Model No.	-	BR5N11-0	-	BR5N11-0	-	BR5N11-0	-	BR5N11-0	-	BR5N11-0	-	BR5N11-0
		Set Pressure MPa	-	25^{+2}_{0}	-	25^{+2}_{0}	-	25^{+2}_{0}	-	25^{+2}_{0}	-	25^{+2}_{0}	-	25^{+2}_{0}

Notes:

※1. Iron Tank Capacity is 5ℓ (Actual Amount for Use 2.9ℓ : H.L. 5.1ℓ -L.L. 2.2ℓ).

1. If hydraulic viscosity is higher than specified, action time will be longer. Please use equivalent hydraulic oil to ISO-VG-32.
2. If using it at low temperature, action time will be longer because the viscosity of hydraulic oil becomes higher.
3. When setting a pressure gauge to a hydraulic circuit, install a damper or use an oil-filled (glycerin) pressure gauge in order to prevent damage caused by pressure surging.
4. Provide enough space at the top of the unit taking into consideration the maintenance of the pump.

Circuit Symbol

This shows the circuit symbol of CPBN0□0-2GRH-5.

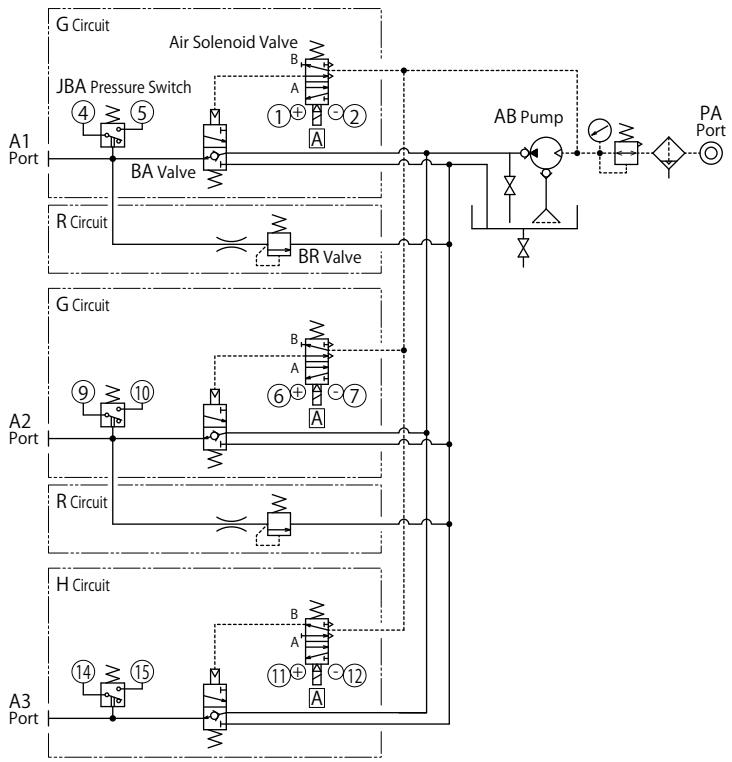

External Dimensions：CPB

※ This drawing shows CPBM000-2GH standard model.
Please contact us for external dimensions for options.

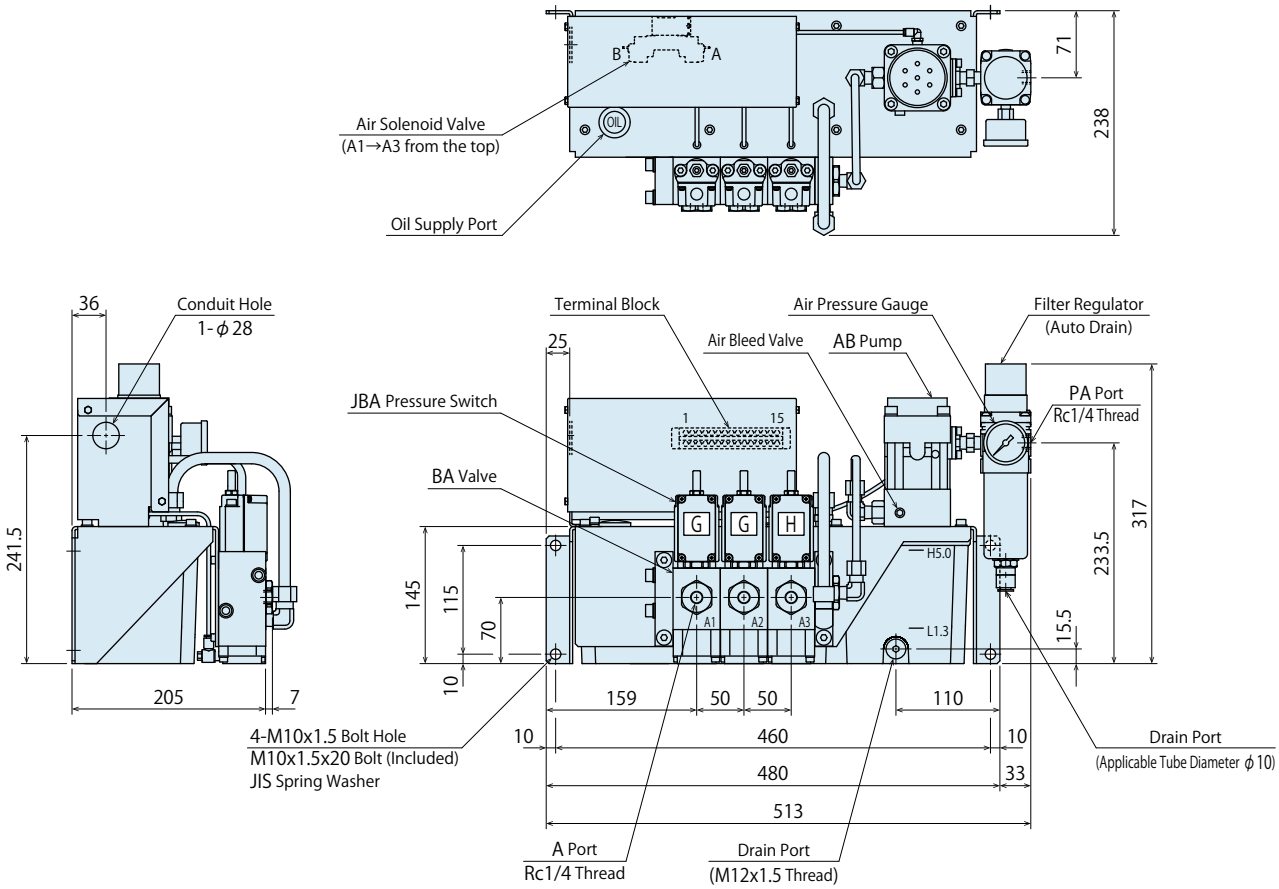

External Dimensions：CPD

※ This drawing shows CPDM000-2GH standard model.
Please contact us for external dimensions for options.

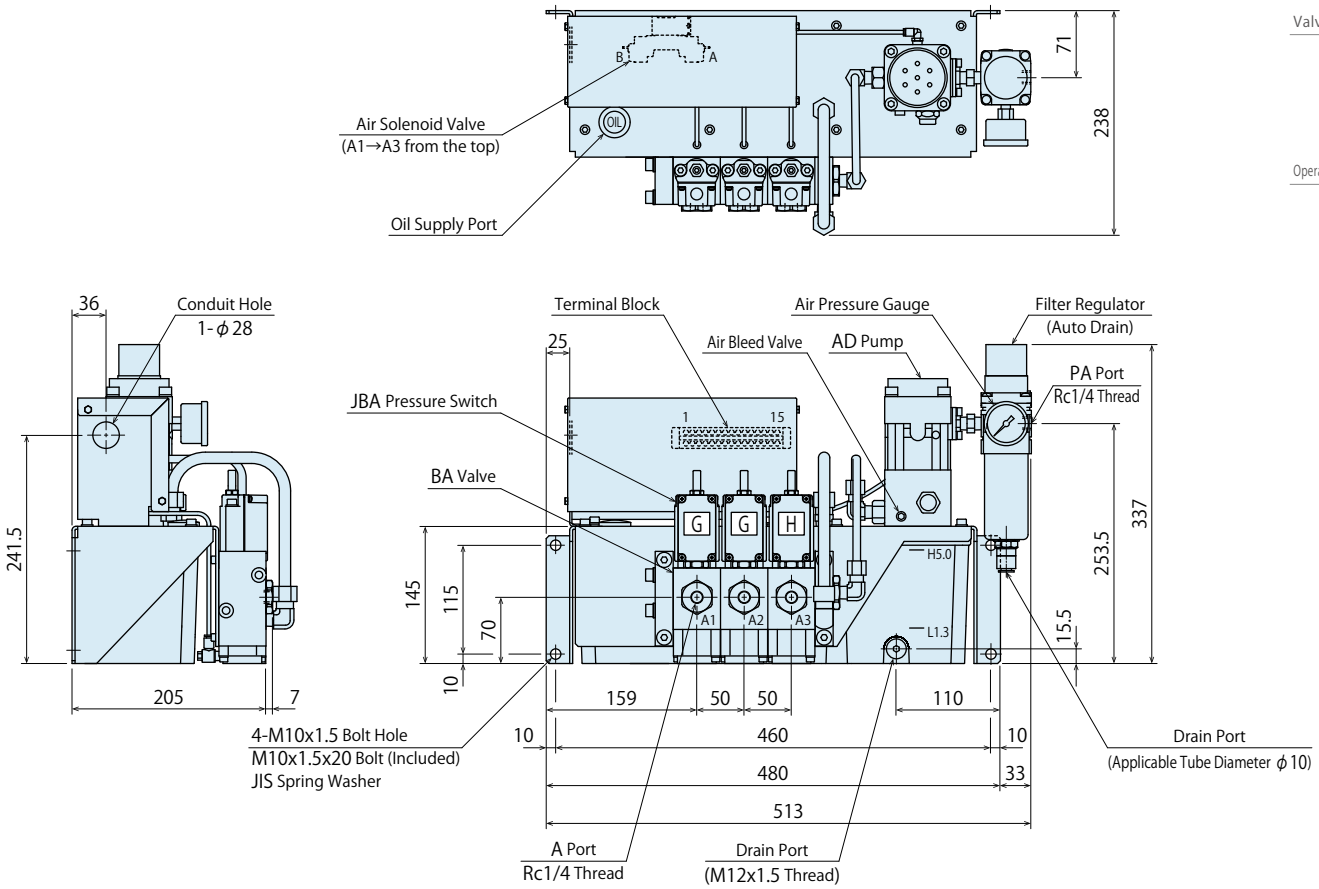

External Dimensions：CPC

※ This drawing shows CPCM000-2GH standard model.
Please contact us for external dimensions for options.

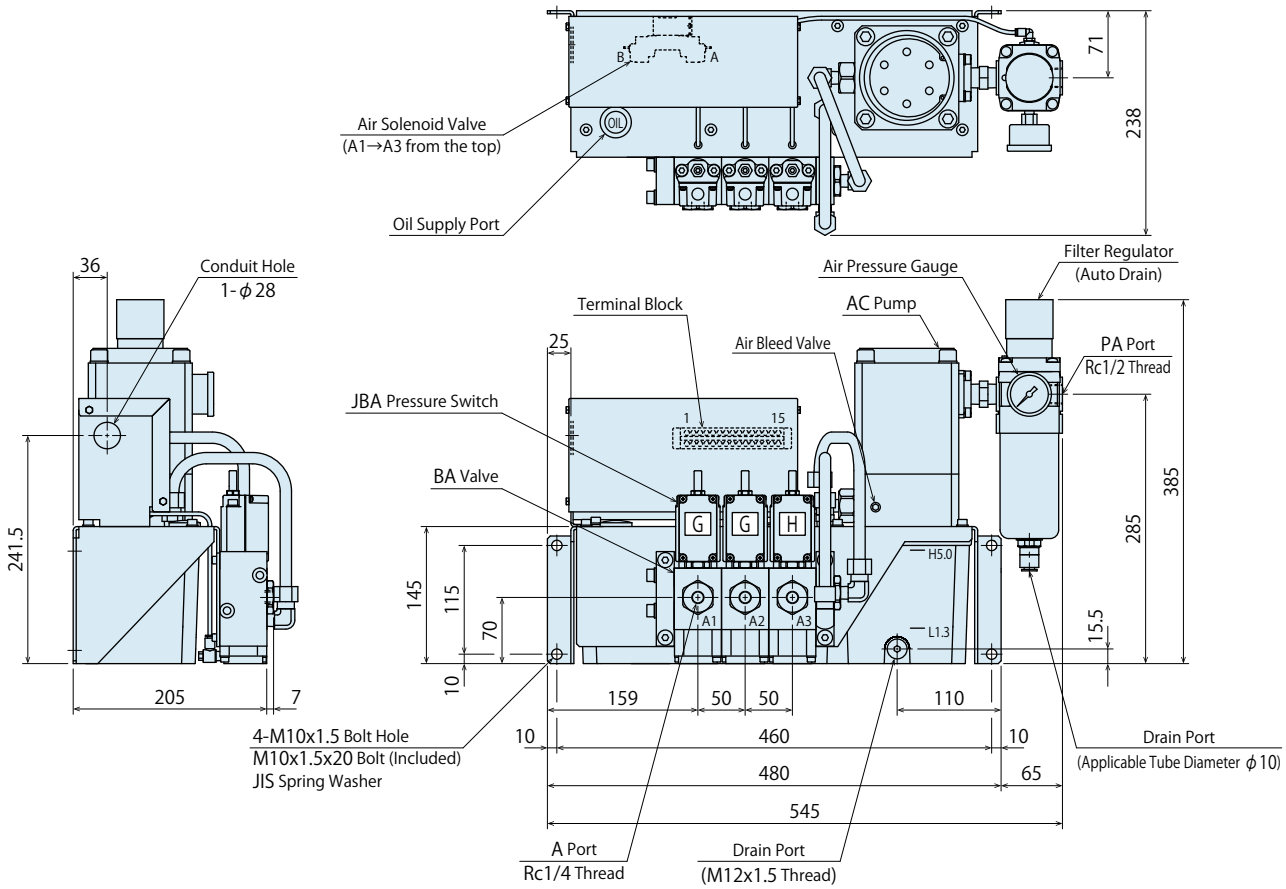

External Dimensions：CPE

※ This drawing shows CPEM000-2GH standard model.
Please contact us for external dimensions for options.

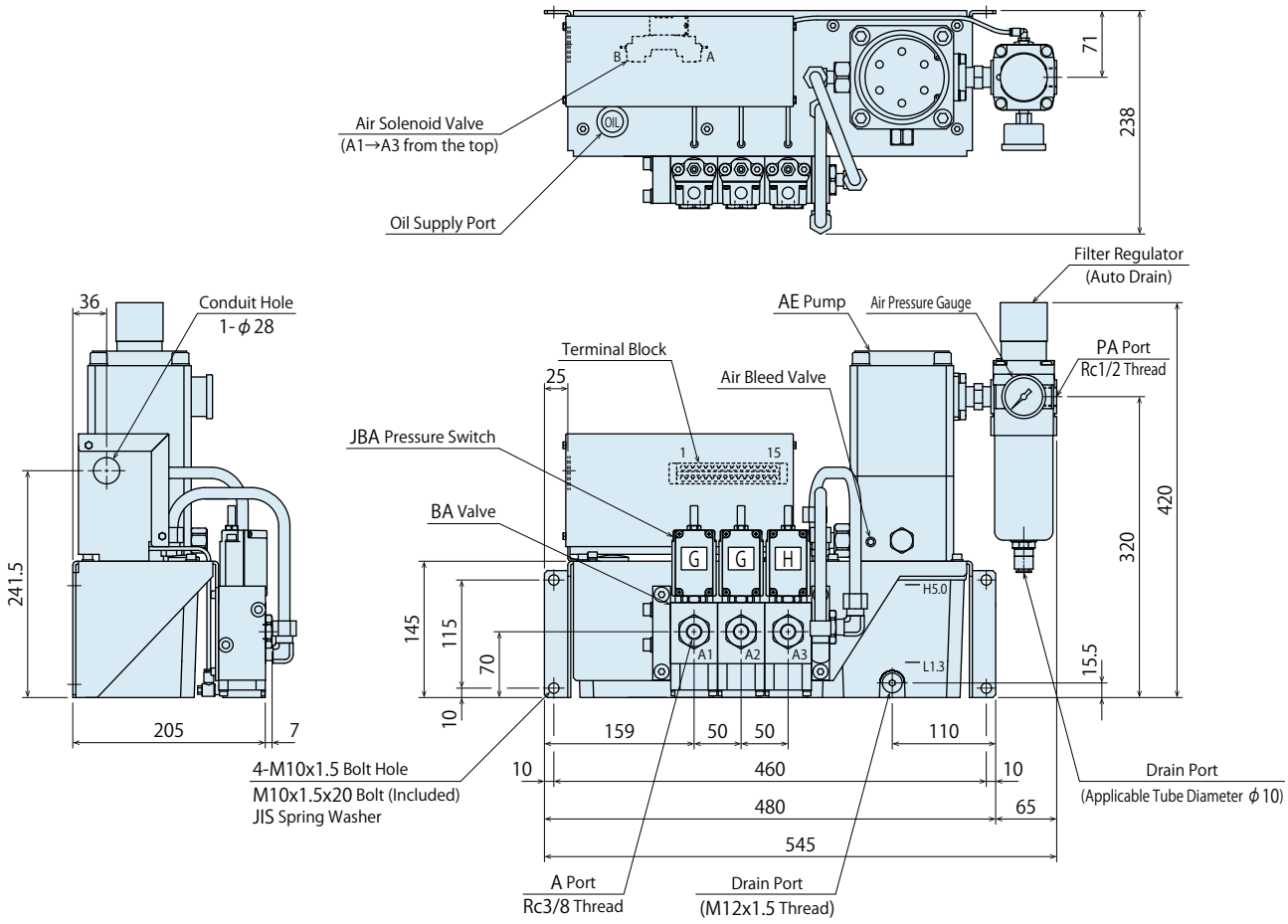

External Dimensions : CQC

※ This drawing shows CQCM000-2GH standard model. Please contact us for external dimensions for options.

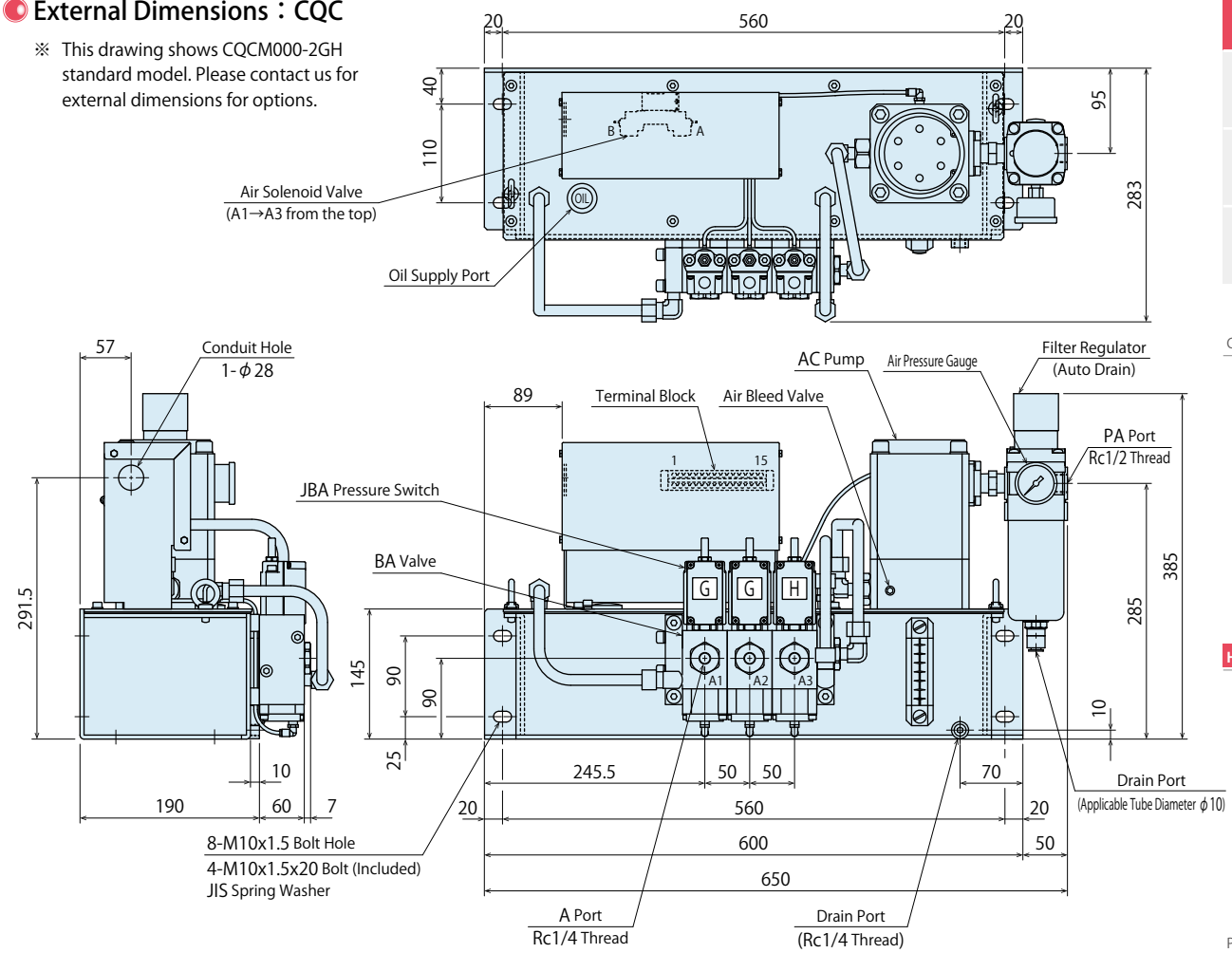

External Dimensions : CQE

※ This drawing shows CQEM000-2GH standard model. Please contact us for external dimensions for options.

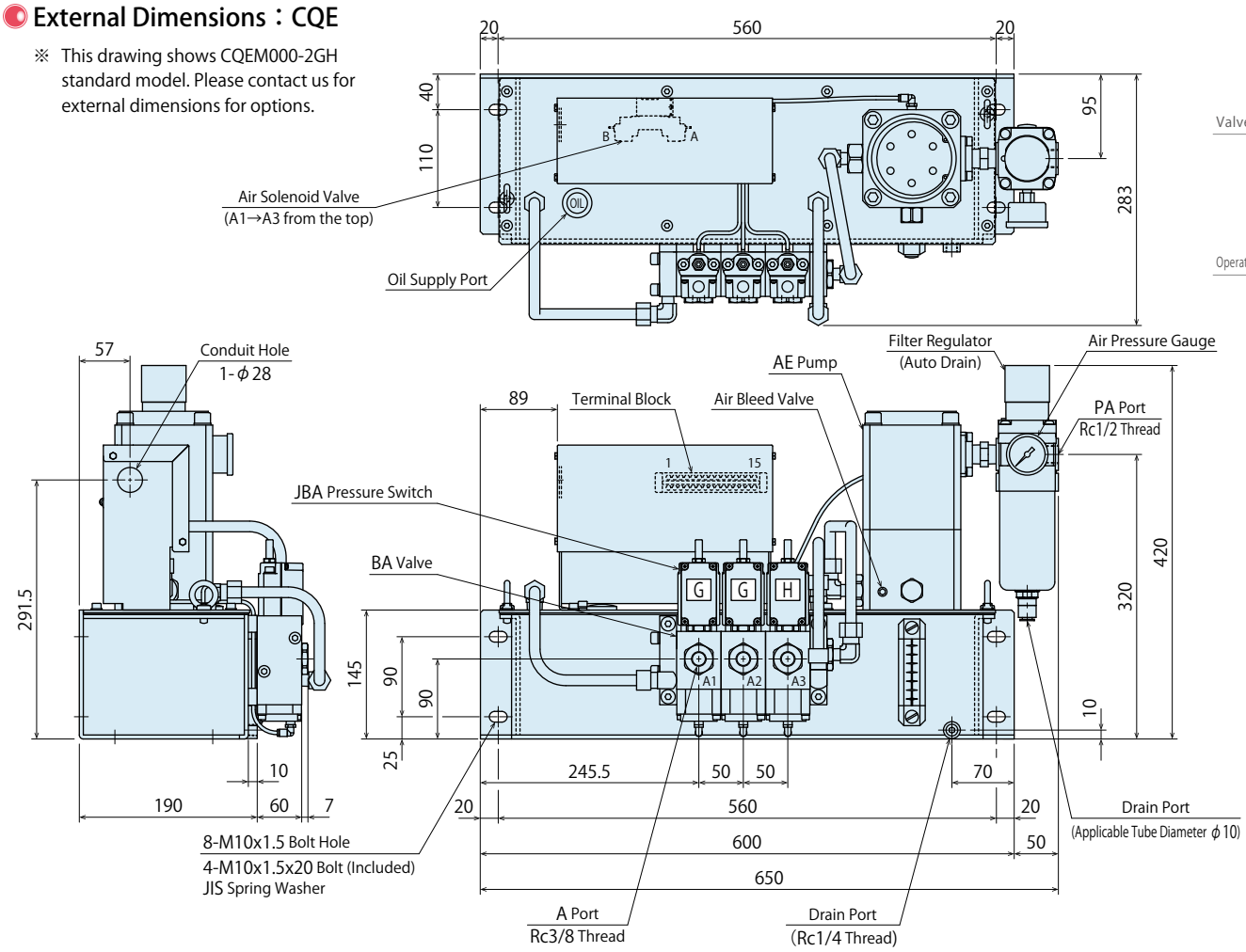

External Dimensions：CPSH000 (Wall Mounted)

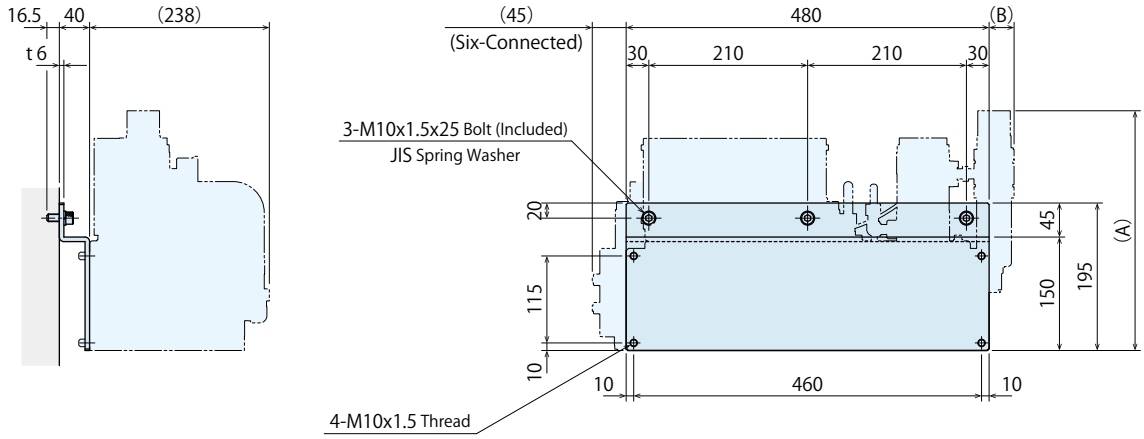

(mm)

Hydraulic Unit Model No.	Dimension A	Dimension B
CPB	317	33
CPD	337	33
CPC	385	65
CPE	420	65

External Dimensions：CPSR000 (Anti-Vibration Rubber)

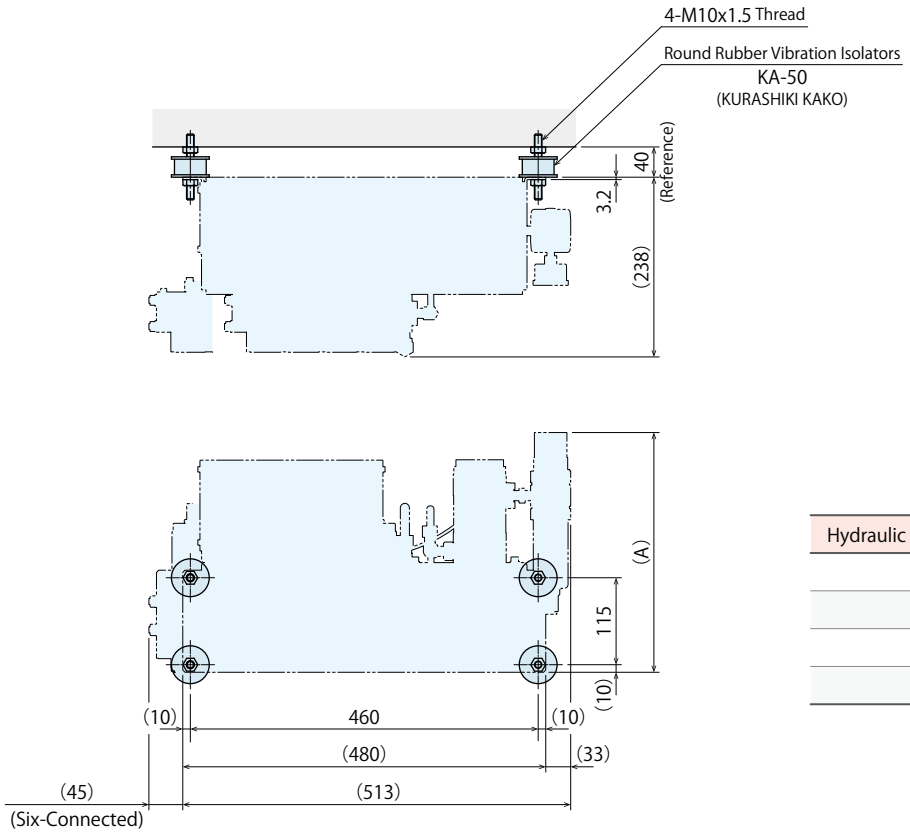

(mm)

Hydraulic Unit Model No.	Dimension A
CPB	317
CPD	337
CPC	385
CPE	420

External Dimensions：CPSV000 (Floor Mounted)

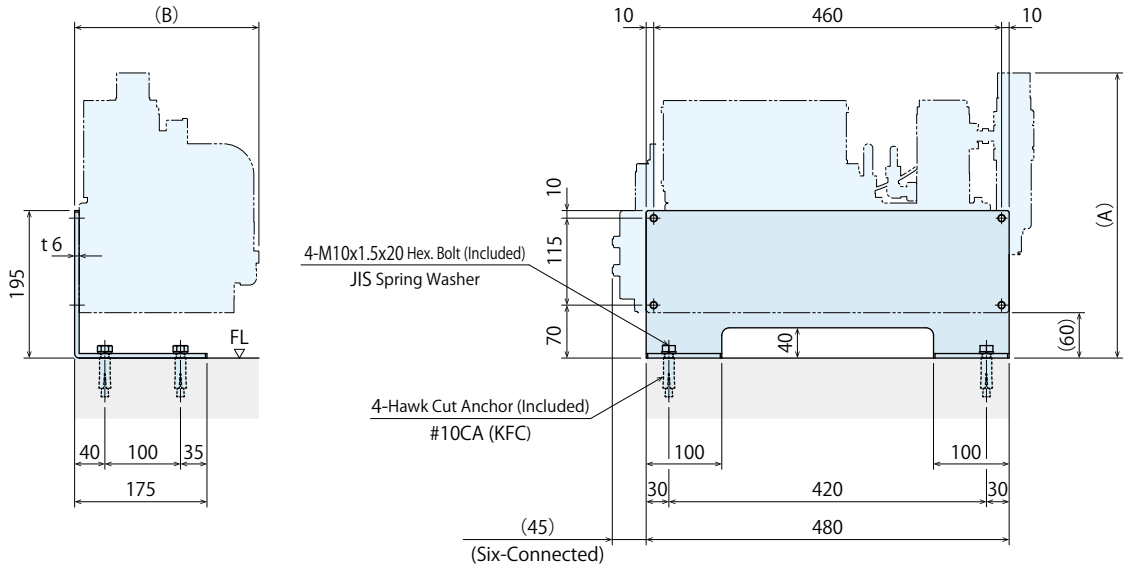

Hawk Cut Anchor Machining Dimensions

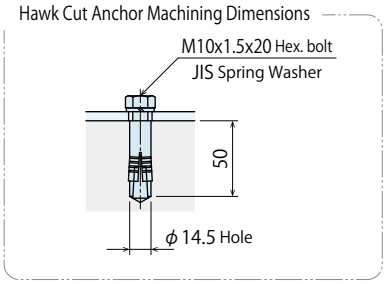

(mm)

Hydraulic Unit Model No.	Dimension A	Dimension B
CPB	317	238
CPD	337	238
CPC	385	238
CPE	420	238

External Dimensions：CQSV000 (Floor Mounted)

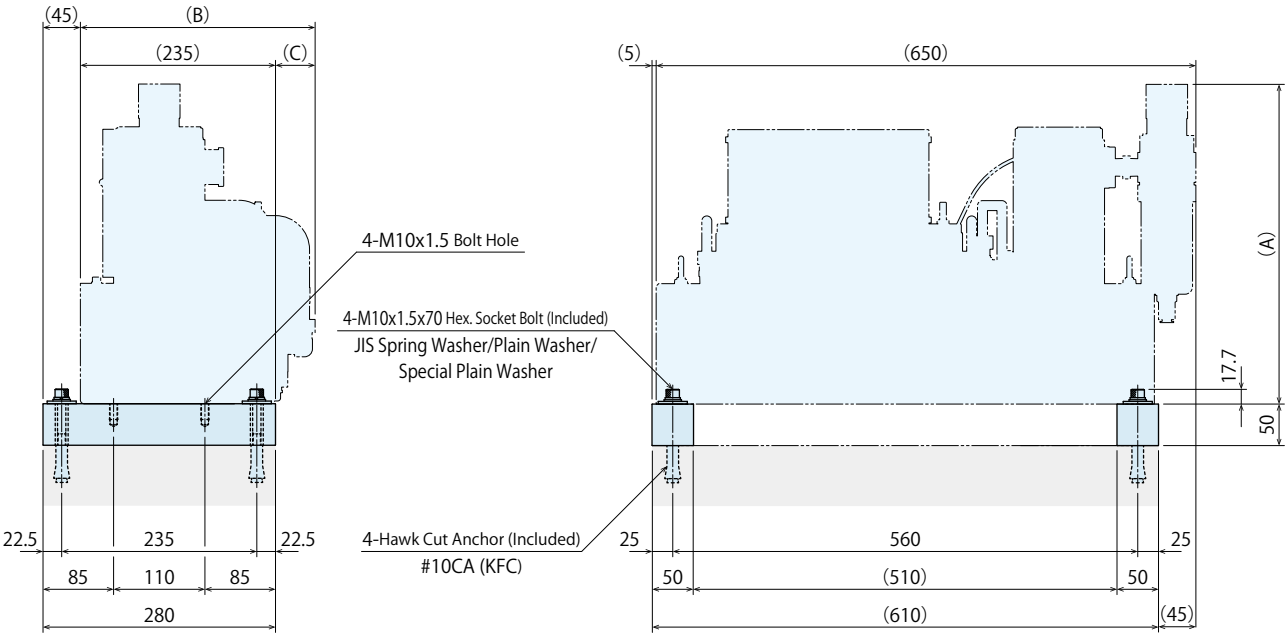

Hawk Cut Anchor Machining Dimensions

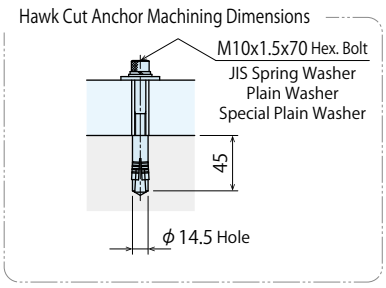

(mm)

Hydraulic Unit Model No.	Dimension A	Dimension B	Dimension C
CQC	385	283	48
CQE	420	283	48

Cautions

Installation Notes (Cautions for Hydraulic Series)

1) Check the fluid to use

- Please use the appropriate fluid by referring to the Hydraulic Fluid List.
- If hydraulic oil with viscosity grade higher than ISO-VG-32 is used, action time would be longer.
- If using it at low temperature, action time will be longer because the viscosity of hydraulic oil becomes higher.

2) Procedure before Piping

- The pipeline, piping connector and fixture circuits should be cleaned by thorough flushing.
- The dust and cutting chips in the circuit may lead to fluid leakage and malfunction.
- Our products except some valves are not equipped with protective function to prevent dust and cutting chips going into the hydraulic system and pipeline.

3) Applying Sealing Tape

- Wrap with tape 1 to 2 times following the screwing direction.
- Pieces of the sealing tape can lead to air leaks and malfunction.
- In order to prevent a foreign substance from going into the product during piping, it should be carefully cleaned.

4) Air Bleeding in the Hydraulic Circuit

- If the hydraulic circuit has excessive air, the action time may become very long.
  After installing the hydraulic circuit, or if the pump run out of oil, be sure to bleed air by the following step.

① Reduce hydraulic supply pressure to less than 2MPa.
② Please loosen the cap nut of pipe fitting that is closest to clamps・RA die lifters by one full turn.
③ Wiggle the pipeline to loosen the outlet of pipeline fitting. The hydraulic fluid mixed with air comes out.

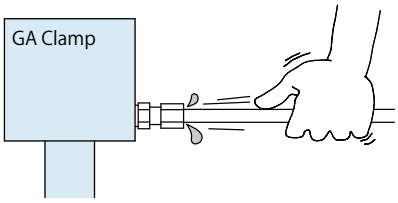

④ Tighten the cap nut after bleeding.
⑤ It is more effective to bleed air at the highest point inside the circuit or at the end of the circuit.

5) Checking Looseness and Retightening

- At the beginning of the machine installation, the bolt/nut may be tightened lightly.
  Check torque and re-tighten as required.

Hydraulic Fluid List

ISO Viscosity Grade ISO-VG-32

Maker	Anti-Wear Hydraulic Oil	Multi-Purpose Hydraulic Oil
Showa Shell Sekiyu	Tellus S2 M 32	Morlina S2 B 32
Idemitsu Kosan	Daphne Hydraulic Fluid 32	Daphne Super Multi Oil 32
JX Nippon Oil & Energy	Super Hyrando 32	Super Mulpus DX 32
Cosmo Oil	Cosmo Hydro AW32	Cosmo New Mighty Super 32
ExxonMobil	Mobil DTE 24	Mobil DTE 24 Light
Matsumura Oil	Hydol AW-32	
Castrol	Hyspin AWS 32	

Note： As it may be difficult to purchase the products as shown in the table from overseas, please contact the respective manufacturer.

Notes on Hydraulic Cylinder Speed Control Unit

Please pay attention to the cautions below. Design the hydraulic circuit for controlling the action speed of hydraulic cylinder. Improper circuit design may lead to malfunctions and damages. Please review the circuit design in advance.

Flow Control Circuit for Single Acting Cylinder

For spring return single acting cylinders, restricting flow during release can extremely slow down or disrupt release action. The preferred method is to control the flow during the lock action using a valve that has free-flow in the release direction. It is also preferred to provide a flow control valve at each actuator.

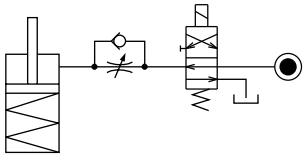

Accelerated clamping speed by excessive hydraulic flow to the cylinder may sustain damage. In this case add flow control to regulate flow.

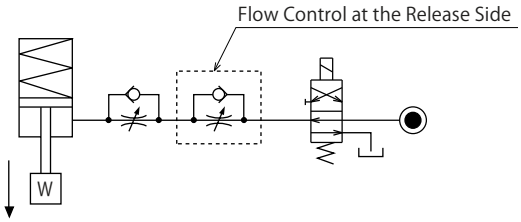

Flow Control Circuit for Double Acting Cylinder

Flow control circuit for double acting cylinder should have meter-out circuits for both the lock and release sides. Meter-in control can have adverse effect by presence of air in the system.

【Meter-out Circuit】

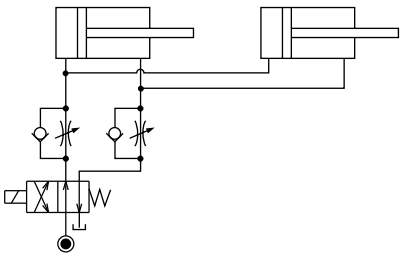

【Meter-in Circuit】

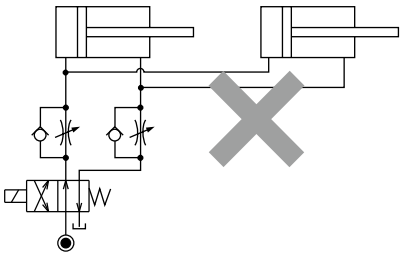

In the case of meter-out circuit, the hydraulic circuit should be designed with the following points.

① Single acting components should not be used in the same flow control circuit as the double acting components. The release action of the single acting cylinders may become erratic or very slow.

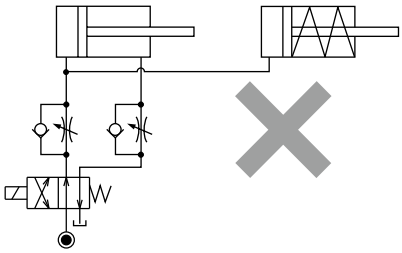

Refer to the following circuit when both the single acting cylinder and double acting cylinder are used together.

○ Separate the control circuit.

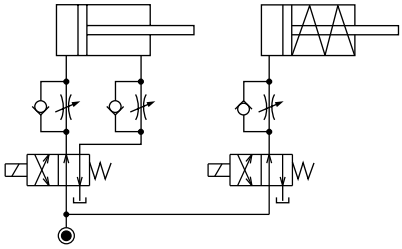

○ Reduce the influence of double acting cylinder control unit. However, due to the back pressure in tank line, single action cylinder is activated after double action cylinder works.

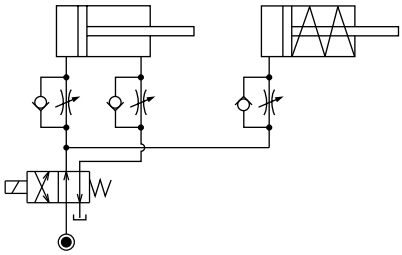

② In the case of meter-out circuit, the inner circuit pressure may increase during the cylinder action because of the fluid supply. The increase of the inner circuit pressure can be prevented by reducing the supplied fluid beforehand via the flow control valve. Especially when using sequence valve or pressure switches for clamping detection. If the back pressure is more than the set pressure then the system will not work as it is designed to.

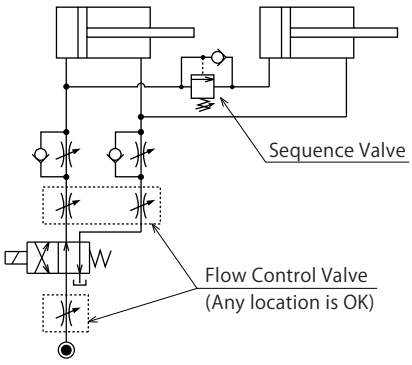

Cautions

Notes on Handling

1) It should be handled by qualified personnel.
- The hydraulic machine / air compressor should be handled and maintained by qualified personnel.

2) Do not handle or remove the machine unless the safety protocols are ensured.
① The machine and equipment can only be inspected or prepared when it is confirmed that the preventive devices are in place.
② Before the machine is removed, make sure that the above-mentioned safety measures are in place. Shut off the air of hydraulic source and make sure no pressure exists in the hydraulic and air circuit.
③ After stopping the machine, do not remove until the temperature cools down.
④ Make sure there is no abnormality in the bolts and respective parts before restarting the machine or equipment.

3) Do not touch clamps (cylinders) while they are working. Otherwise, your hands may be injured.

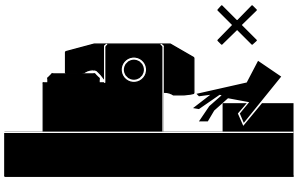

4) Do not disassemble or modify.
- If the equipment is taken apart or modified, the warranty will be voided even within the warranty period.

Maintenance・Inspection

1) Removal of the Machine and Shut-off of Pressure Source
- Before the machine is removed, make sure that the above-mentioned safety measures are in place. Shut off the air of hydraulic source and make sure no pressure exists in the hydraulic and air circuit.
- Make sure there is no abnormality in the bolts and respective parts before restarting.

2) Regularly clean the area around the equipment.
- If it is used when the surface is contaminated with dirt, it may lead to packing seal damage, malfunctioning , fluid leakage and air leaks.

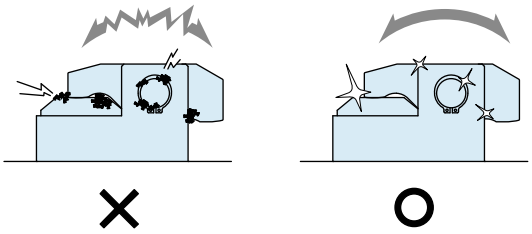

3) If disconnecting by couplers on a regular basis, air bleeding should be carried out daily to avoid air mixed in the circuit.

4) Regularly tighten bolts and pipe line, mounting bolts, nuts, circlips and cylinders to ensure proper use.

5) Make sure the hydraulic fluid has not deteriorated.

6) Make sure there is smooth action and no abnormal noise.
- Especially when it is restarted after left unused for a long period, make sure it can be operated correctly.

7) The products should be stored in the cool and dark place without direct sunshine or moisture.

8) Please contact us for overhaul and repair.

Warranty

1) Warranty Period

- The product warranty period is 18 months from shipment from our factory or 12 months from initial use, whichever is earlier.

2) Warranty Scope

- If the product is damaged or malfunctions during the warranty period due to faulty design, materials or workmanship, we will replace or repair the defective part at our expense.
  Defects or failures caused by the following are not covered.

① If the stipulated maintenance and inspection are not carried out.
② If the product is used while it is not suitable for use based on the operator' s judgment, resulting in defect.
③ If it is used or handled in inappropriate way by the operator.
(Including damage caused by the misconduct of the third party.)
④ If the defect is caused by reasons other than our responsibility.
⑤ If repair or modifications are carried out by anyone other than Kosmek, or without our approval and confirmation, it will void warranty.
⑥ Other caused by natural disasters or calamities not attributable to our company.
⑦ Parts or replacement expenses due to parts consumption and deterioration.
(Such as rubber, plastic, seal material and some electric components.)

Damages excluding from direct result of a product defect shall be excluded from the warranty.

Sales Offices

Sales Offices across the World

Japan Overseas Sales	**TEL. +81-78-991-5162**	FAX. +81-78-991-8787
	KOSMEK LTD. 1-5, 2-chome, Murotani, Nishi-ku, Kobe-city, Hyogo, Japan 651-2241 〒651-2241 兵庫県神戸市西区室谷2丁目1番5号	
USA KOSMEK（USA）LTD.	**TEL. +1-630-620-7650**	FAX. +1-630-620-9015
	650 Springer Drive, Lombard, IL 60148 USA	
Mexico KOSMEK USA Mexico Office	**TEL. +52-442-161-2347**	
	Blvd Jurica la Campana 1040, B Colonia Punta Juriquilla Queretaro, QRO 76230 Mexico	
EUROPE KOSMEK EUROPE GmbH	**TEL. +43-463-287587**	FAX. +43-463-287587-20
	Schleppeplatz 2 9020 Klagenfurt am Wörthersee Austria	
China KOSMEK（CHINA）LTD. 考世美(上海)貿易有限公司	**TEL. +86-21-54253000**	FAX. +86-21-54253709
	Room601, RIVERSIDE PYRAMID No.55, Lane21, Pusan Rd, Pudong Shanghai 200125, China 中国上海市浦东新区浦三路21弄55号银亿滨江中心601室 200125	
India KOSMEK LTD - INDIA	**TEL. +91-9880561695**	
	F 203, Level-2, First Floor, Prestige Center Point, Cunningham Road, Bangalore -560052 India	
Thailand Thailand Representative Office	**TEL. +66-2-300-5132**	FAX. +66-2-300-5133
	67 Soi 58, RAMA 9 Rd., Suanluang, Suanluang, Bangkok 10250, Thailand	
Taiwan (Taiwan Exclusive Distributor) Full Life Trading Co., Ltd. 盈生貿易有限公司	**TEL. +886-2-82261860**	FAX. +886-2-82261890
	16F-4, No.2, Jian Ba Rd., Zhonghe District, New Taipei City Taiwan 23511 台湾新北市中和區建八路2號 16F－4（遠東世紀廣場）	
Philippines (Philippines Exclusive Distributor) G.E.T. Inc, Phil.	**TEL. +63-2-310-7286**	FAX. +63-2-310-7286
	Victoria Wave Special Economic Zone Mt. Apo Building, Brgy. 186, North Caloocan City, Metro Manila, Philippines 1427	
Indonesia (Indonesia Exclusive Distributor) PT. Yamata Machinery	**TEL. +62-21-29628607**	FAX. +62-21-29628608
	Delta Commercial Park I, Jl. Kenari Raya B-08, Desa Jayamukti, Kec. Cikarang Pusat Kab. Bekasi 17530 Indonesia	

Sales Offices in Japan

Head Office Osaka Sales Office Overseas Sales	**TEL. 078-991-5162**	FAX. 078-991-8787
	〒651-2241 兵庫県神戸市西区室谷2丁目1番5号	
Tokyo Sales Office	**TEL. 048-652-8839**	FAX. 048-652-8828
	〒331-0815 埼玉県さいたま市北区大成町4丁目81番地	
Nagoya Sales Office	**TEL. 0566-74-8778**	FAX. 0566-74-8808
	〒446-0076 愛知県安城市美園町2丁目10番地1	
Fukuoka Sales Office	**TEL. 092-433-0424**	FAX. 092-433-0426
	〒812-0006 福岡県福岡市博多区上牟田1丁目8-10-101	

Global Network

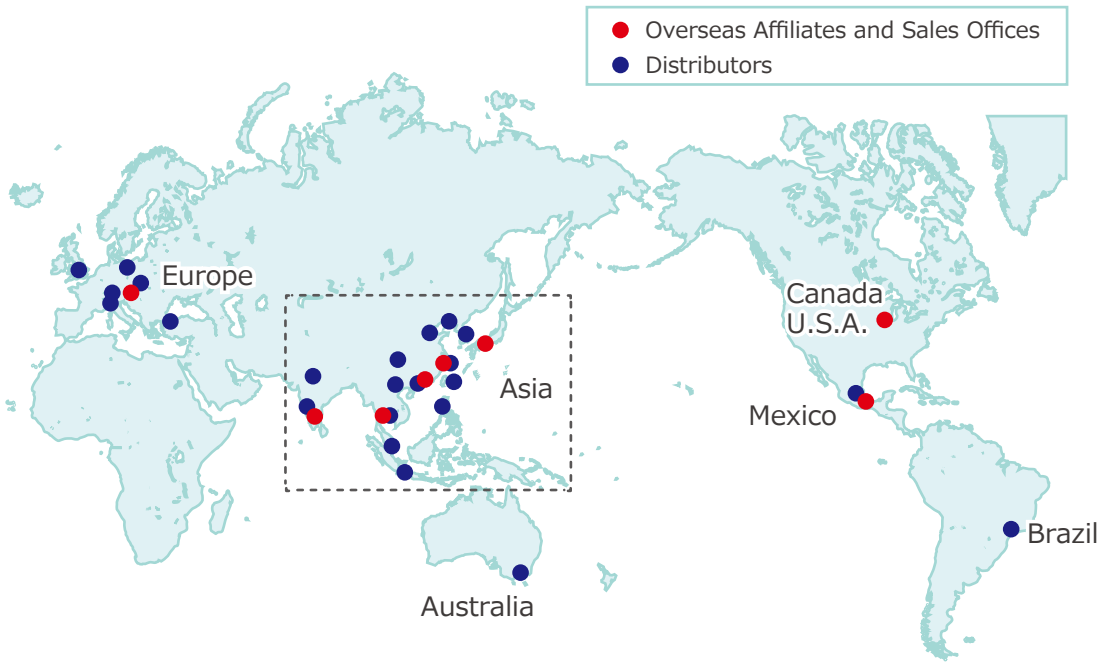

Asia Detailed Map

KOSMEK
Harmony in Innovation

- FOR FURTHER INFORMATION ON UNLISTED SPECIFICATIONS AND SIZES, PLEASE CALL US.
- SPECIFICATIONS IN THIS CATALOG ARE SUBJECT TO CHANGE WITHOUT NOTICE.

ISO 9001
JQA-QMA10823
KOSMEK HEAD OFFICE
JAB
CM009