Screw Locator

Model VXF

Our Screw Locator's locates pallets and sub-plates with 3 μm or better repeated accuracy with easy manual setup.

The "Screw Locator" performs high-precision locating by simply fastening the bolts.

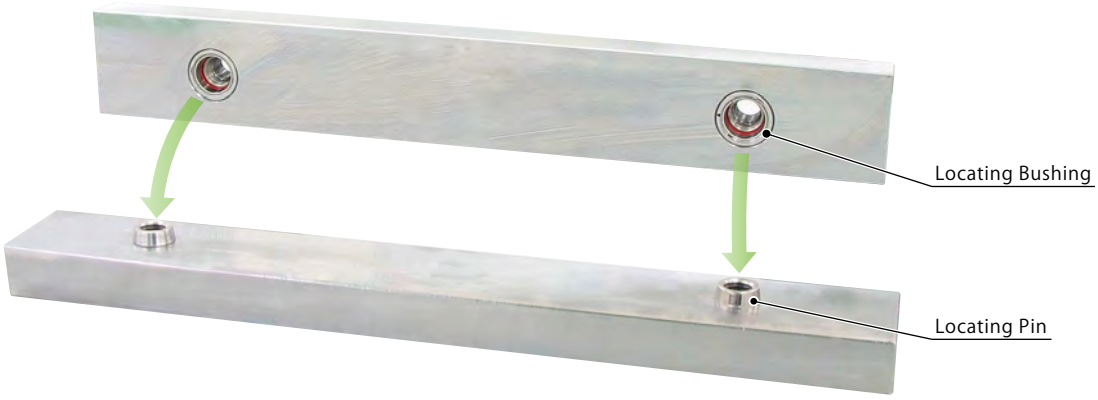

Mechanical pins tend to have gaps between the tapered surfaces creating unreliable accuracy and repeatability.

- Less precision with gaps in between.
- Space is needed to have the pin.

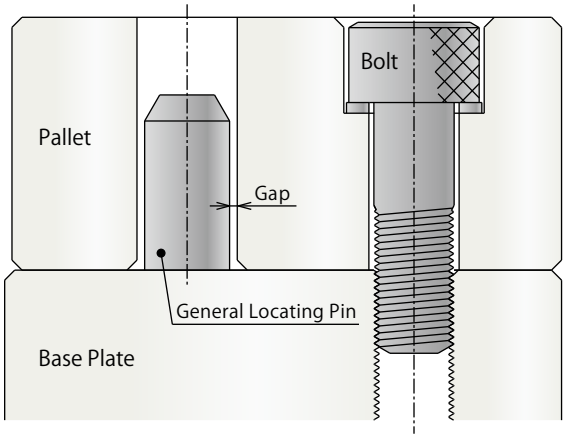

The Screw Locator's two main features are
1) taper to taper surface
2) 3 μm or better repeated accuracy and repeatability.

- High locating precision makes less defective parts.
- More compact and saves valuable space.

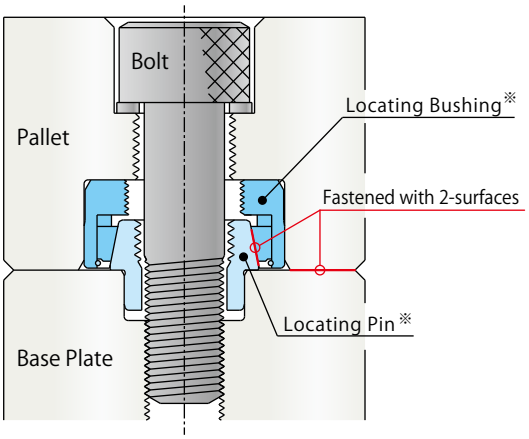

※ ' Screw Locator ' consists of locating pin and locating bushing.

Action Description

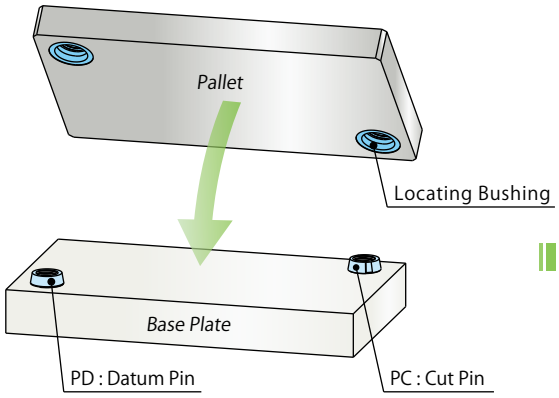

Set the pallet.

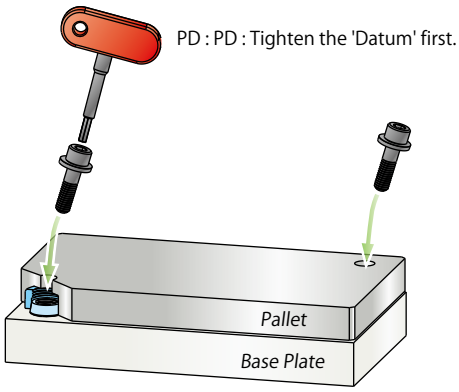

Fasten a pallet on base plate with bolts.
Tightening procedure is tighten PD : Datum (round) first then PC : Cut (Diamond).
The tightening of the bolt fastens and locates at the same time.

Kosmek's "Screw Locator" consists of 'Datum-Pin' (Round) and 'Cut-Pin' (Diamond) like other manual locating pins.

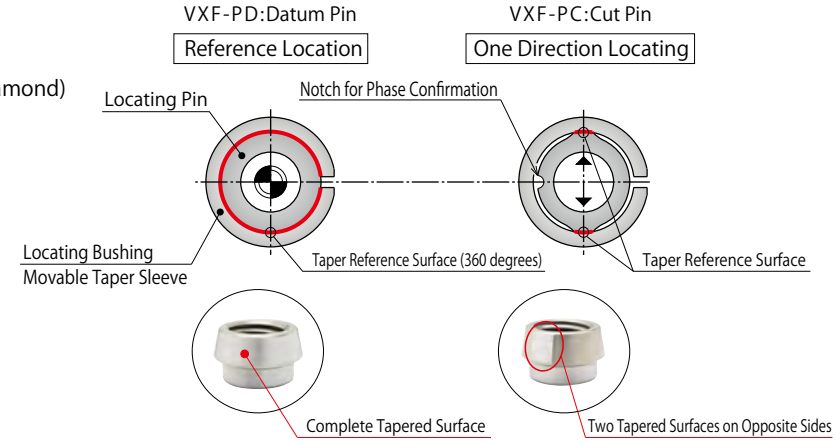

Application Examples

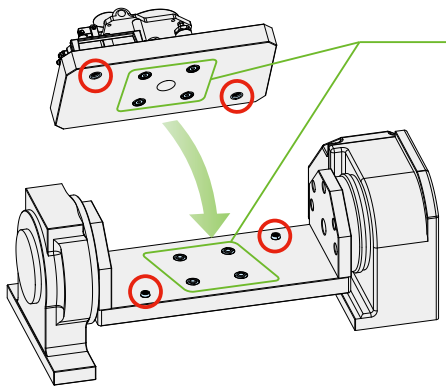

For fixture locating and quick set-up for machining operations.

■ **Auto Coupler**

Model **JVA/JVB**

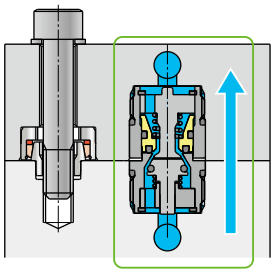

It is possible to provide hydraulic or air pressure from a base plate by using auto couplers.

Refer to P.1047 for Auto Coupler model : JVA/JVB.

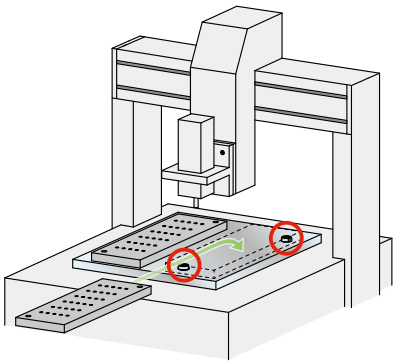

For pallet locating of desktop robot.

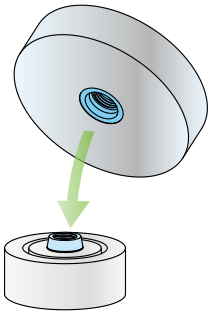

High precision fastening between two machine parts.

※ If there is no need of diamond locating, then the datum pin can be used in singular fashion.

High-Power Series
Pneumatic Series
Hydraulic Series
Valve / Coupler Hydraulic Unit
Manual Operation Accessories
Cautions / Others
Screw Locator
VXF
Manual Expansion Locating Pin
VX
Manifold Block
WHZ-MD
LZY-MD
LZ-MS
LZ-MP
TMZ-1MB
TMZ-2MB
DZ-M
Manifold Block / Nut
DZ-R
DZ-C
DZ-P
DZ-B
LZ-S
LZ-SQ
TNZ-S
TNZ-SQ
WNZ-SQ
Pressure Switch
JBA
Pressure Gauge
JGA/JGB
Manifold
JX
Coupler Switch
PS
G-Thread Fitting

Description of Movable Taper Sleeve

Locating Method：Dual Surface with Movable Taper Sleeve

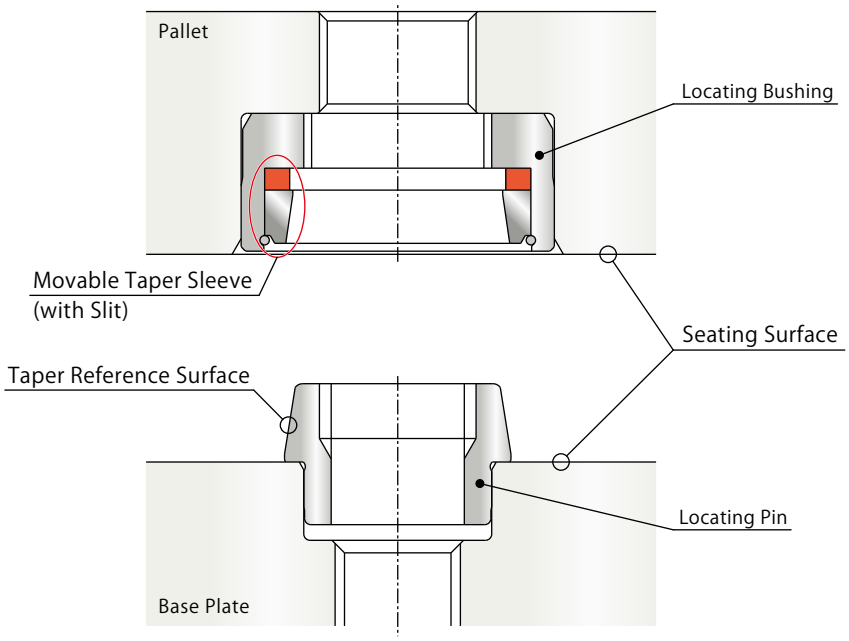

The Benefits of Movable Taper Sleeve

① Absorbs tolerance variations in each location pin and locating bushing.

② Absorbs wear of locating part due to long time use.

③ Absorbs space variations of mounting holes.

④ Absorbs space variations due to temperature change.

The advantage of the 'Movable Taper Sleeve' is to absorb dimension error by vertical movements.
This is achieved by removing clearance between the locating pin, tapered sleeves and locating bushing.
The dual surface fastening enables high precision with repeated accurate locating.

Cautions

Movement and Error Absorbed by the Movable Taper Sleeve (①/②)

Starting of Action for Locating

There is almost zero clearance as the moving parts come in contact with the taper reference surface.

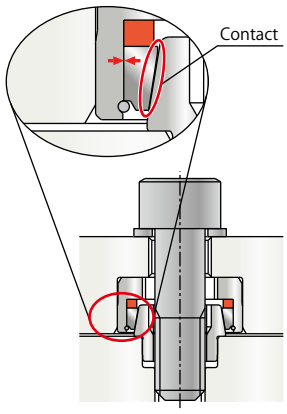

XY Locating

Clearance between the taper sleeve and the moving parts of the bushing is completely zero.

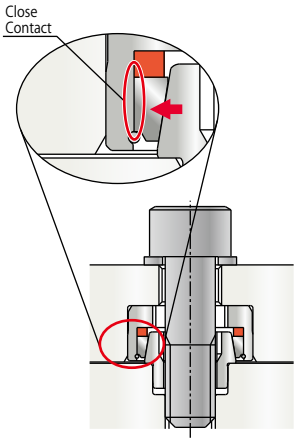

XYZ Locating

Absorbs errors by raising the taper sleeve. Seating surface touches and locates on two surfaces.

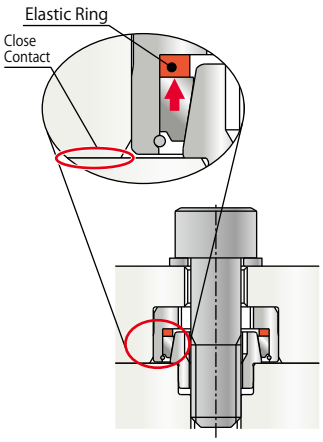

Movable taper sleeve absorbs distance error. (③/④)

Absorbs distance variations minimizing the wear of locating parts and prevents deformation of locating Pin/ locating bushing.

※ Accuracy becomes paramount when securing multiple sub plates.

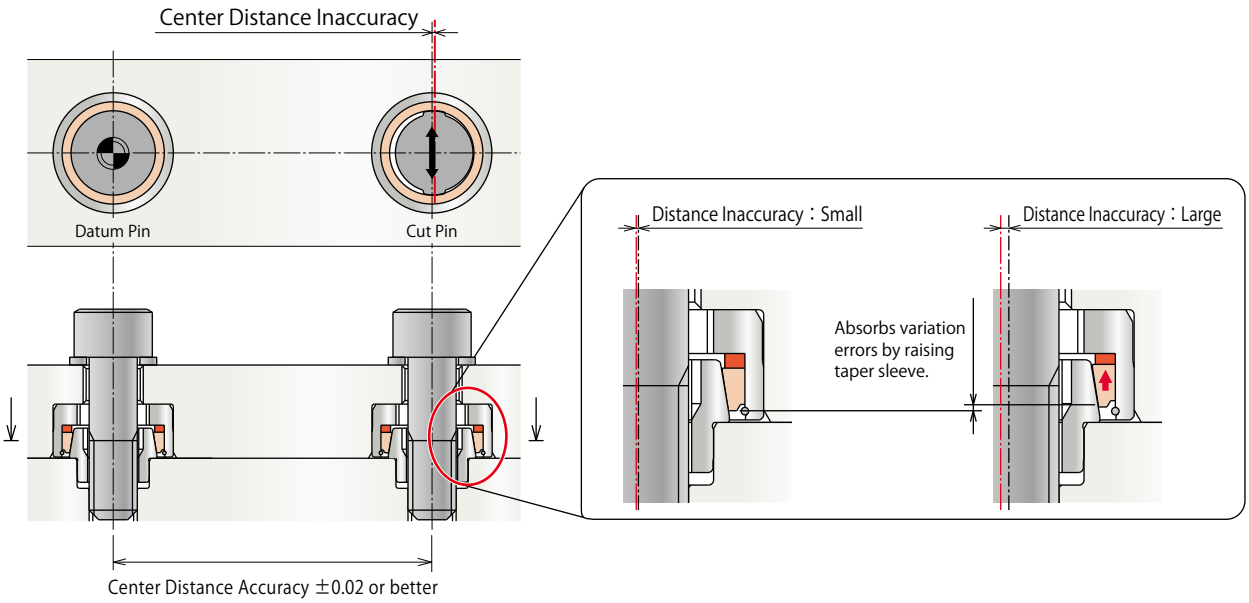

High-Power Series
Pneumatic Series
Hydraulic Series
Valve / Coupler Hydraulic Unit
Manual Operation Accessories
Cautions / Others
Screw Locator
VXF
Manual Expansion Locating Pin
VX
Manifold Block
WHZ-MD
LZY-MD
LZ-MS
LZ-MP
TMZ-1MB
TMZ-2MB
DZ-M
Manifold Block / Nut
DZ-R
DZ-C
DZ-P
DZ-B
LZ-S
LZ-SQ
TNZ-S
TNZ-SQ
WNZ-SQ
Pressure Switch
JBA
Pressure Gauge
JGA/JGB
Manifold
JX
Coupler Switch
PS
G-Thread Fitting

Model No. Indication (Locating Pin)

VXF 0 08 0 - P D

1 2 3

1 Mounting Bolt Size

04 : Mounting Bolt Size M4
05 : Mounting Bolt Size M5
06 : Mounting Bolt Size M6
08 : Mounting Bolt Size M8
10 : Mounting Bolt Size M10
12 : Mounting Bolt Size M12
16 : Mounting Bolt Size M16

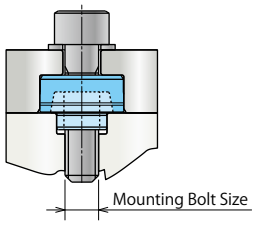

2 Design No.

0 : Revision Number

3 Function Classification

D : Datum Pin (For Reference Locating)
C : Cut Pin (For One Direction Locating)

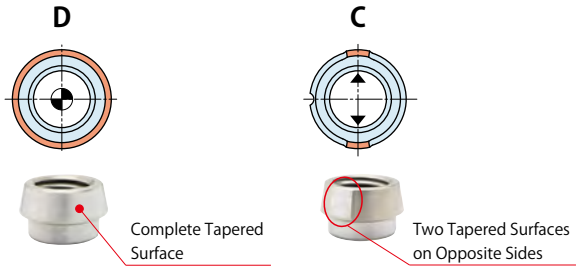

Datum Pin Cut Pin

Combination of Locating Pin and Locating Bushing

Mounting Bolt Size	Locating Pin Model No.	Locating Bushing Model No.	Function
M4 Bolt	VXF0040-PD (Datum Pin)	VXF0040-B	Reference Locating
	VXF0040-PC (Cut Pin)	VXF0040-B	One Direction Locating
M5 Bolt	VXF0050-PD (Datum Pin)	VXF0050-B	Reference Locating
	VXF0050-PC (Cut Pin)	VXF0050-B	One Direction Locating
M6 Bolt	VXF0060-PD (Datum Pin)	VXF0060-B	Reference Locating
	VXF0060-PC (Cut Pin)	VXF0060-B	One Direction Locating
M8 Bolt	VXF0080-PD (Datum Pin)	VXF0080-B	Reference Locating
	VXF0080-PC (Cut Pin)	VXF0080-B	One Direction Locating
M10 Bolt	VXF0100-PD (Datum Pin)	VXF0100-B	Reference Locating
	VXF0100-PC (Cut Pin)	VXF0100-B	One Direction Locating
M12 Bolt	VXF0120-PD (Datum Pin)	VXF0120-B	Reference Locating
	VXF0120-PC (Cut Pin)	VXF0120-B	One Direction Locating
M16 Bolt	VXF0160-PD (Datum Pin)	VXF0160-B	Reference Locating
	VXF0160-PC (Cut Pin)	VXF0160-B	One Direction Locating

Model No. Indication (Locating Bushing)

VXF 0 08 0 - B

1 2

1 Accommodate VXF Locating Pin Model

04 : VXF0040-PD / VXF0040-PC
05 : VXF0050-PD / VXF0050-PC
06 : VXF0060-PD / VXF0060-PC
08 : VXF0080-PD / VXF0080-PC
10 : VXF0100-PD / VXF0100-PC
12 : VXF0120-PD / VXF0120-PC
16 : VXF0160-PD / VXF0160-PC

2 Design No.

0 : Revision Number

Specifications

Model No.		VXF0040	VXF0050	VXF0060	VXF0080	VXF0100	VXF0120	VXF0160
Locating Repeatability mm		0.003						
Stroke mm		0.2				0.3		
Max. Loading Weight kg	Horizontal Mounting	100	200	300	400	500	600	800
	Vertical Mounting	20	40	60	80	100	120	160
Min. Required Tightening Force ※1 kN		1.2	1.4	1.5	1.8	2.0	2.5	3.0
Tightening Procedure		VXF-PD → VXF-PC						
Operating Temperature ℃		0 ~ 70						
Mass g	Locating Pin	2	3	4	5	10	15	25
	Locating Bushing	4	7	10	11	22	36	50

Notes :
1. This product is made only for locating. It does not have clamping function. Tightening force is required when locating.
※1. Minimum tightening force indicates the required tightening force (pressing force) per one locating unit.
(It is the required axial force when tightening the center of VXF with a bolt.)
Tighten the mounting bolt with appropriate tightening torque. (Refer to P.1205 for reference data of bolt axial force and tightening torque.)
Tightening torque may differ according to bolt tensile strength grade / plate material.
For further information, please refer to JIS B 1083, JIS B 1084 or catalogs of bolt makers.

External Dimensions

Locating Bushing : VXF□-B

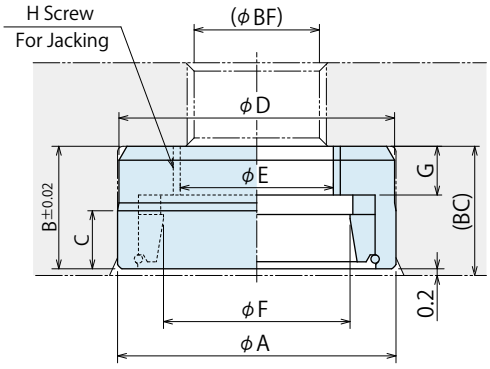

Arrow View ★

Locating Pin : VXF□-P□

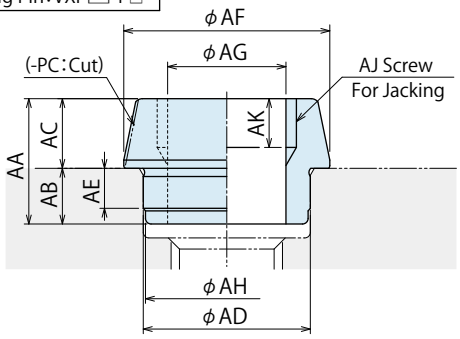

Machining Dimensions of Mounting Area

Locating Bushing (VXF□-B) Side

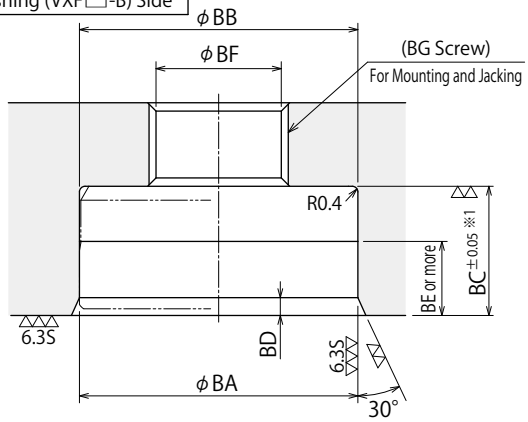

Locating Pin (VXF□-P□) Side

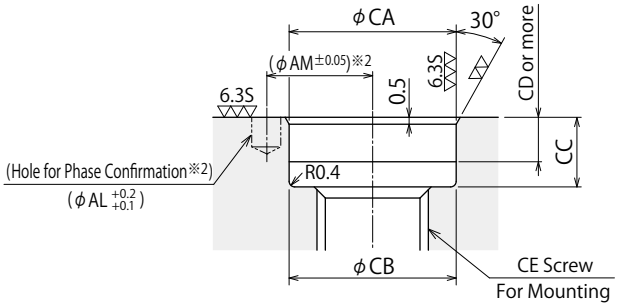

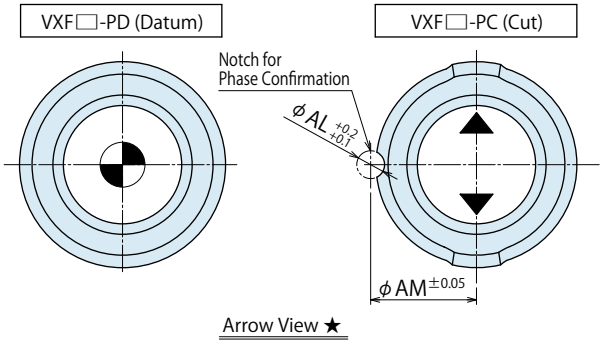

Notes :

※1. If material of a base plate and pallet is different, BC machining tolerance should be ±0.02.

※2. Prepare this hole for phase confirmation. The overlap of the notch and hole will confirm phase. With this hole, phase alignment becomes easier when using the parallel pin for mounting VXF-PC. (When using parallel pin, please take into account for the removal of the pin after phase alignment.)

Mounting Distance Accuracy

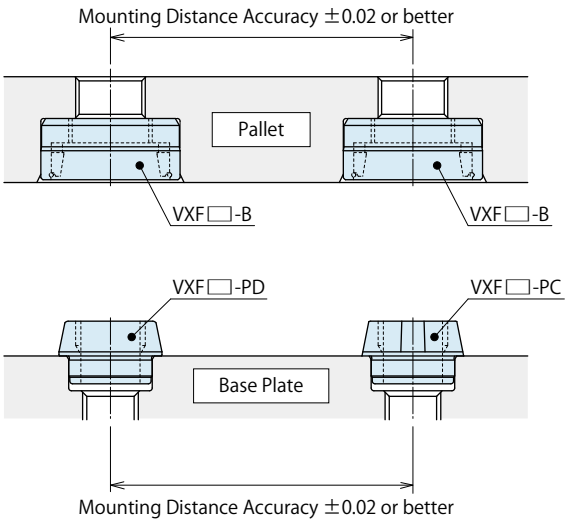

VXF-PC Phase

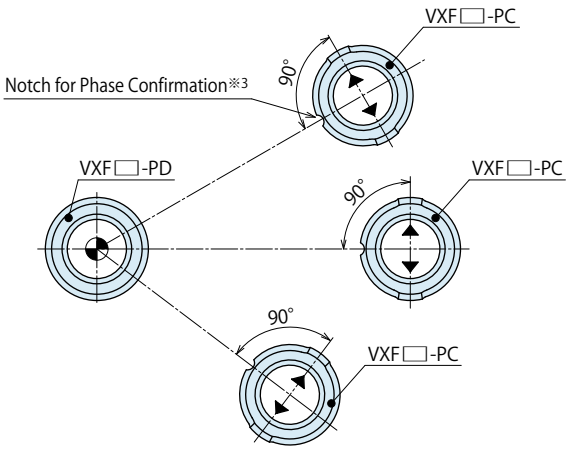

Note :

※3. Please align the notch of VXF-PC perpendicular to the center of VXF-PD.

External Dimensions and Machining Dimensions for Mounting

(mm)

Model No.	VXF0040	VXF0050	VXF0060	VXF0080	VXF0100	VXF0120	VXF0160
A	$13^{+0.033}_{+0.020}$	$16^{+0.033}_{+0.020}$	$18^{+0.033}_{+0.020}$	$20^{+0.033}_{+0.020}$	$25^{+0.033}_{+0.020}$	$30^{+0.033}_{+0.020}$	$35^{+0.042}_{+0.026}$
B	6.8	7.8	8.3	8.8	10.8	12.8	13.8
C	3.8	4	4	4.5	5.5	6.5	8
D	12.8	15.8	17.8	19.8	24.8	29.8	34.8
E	5.1	6.8	9	11	12.5	16.5	20.5
F	7.7	9.5	11.5	13.3	16.8	20.2	24.9
G	2	2.8	3.2	3.5	4.2	5.2	5.2
H	M6×1	M8×1.25	M10×1.5	M12×1.75	M14×2	M18×2.5	M22×2.5
AA	8	8.5	8.5	9	11	13	14
AB	3.5	4	4	4	5	6	6
AC	4.5	4.5	4.5	5	6	7	8
AD	$6.5p6^{+0.024}_{+0.015}$	$8p6^{+0.024}_{+0.015}$	$10p6^{+0.024}_{+0.015}$	$12p6^{+0.029}_{+0.018}$	$15p6^{+0.029}_{+0.018}$	$18p6^{+0.029}_{+0.018}$	$23p6^{+0.035}_{+0.022}$
AE	2.5	3	3	3	4	4.5	4.5
AF	9	10.8	12.8	14.8	18.6	22.2	27.3
AG	4.3	5.3	6.8	8.5	11	14	18
AH	6.3	7.8	9.8	11.8	14.8	17.8	22.8
AJ	M5×0.8	M6×1	M8×1.25	M10×1.5	M12×1.75	M16×2	M20×2.5
AK	3.5	3.5	3.5	3.5	4.5	5	6
AL	1.5	1.5	1.5	2	2.5	3	4
AM	4.7	5.6	6.5	7.6	9.6	11.4	14.4
BA	$13H6^{+0.011}_{0}$	$16H6^{+0.011}_{0}$	$18H6^{+0.011}_{0}$	$20H6^{+0.013}_{0}$	$25H6^{+0.013}_{0}$	$30H6^{+0.013}_{0}$	$35H6^{+0.016}_{0}$
BB	$13^{+0.011}_{-0.1}$	$16^{+0.011}_{-0.1}$	$18^{+0.011}_{-0.1}$	$20^{+0.013}_{-0.1}$	$25^{+0.013}_{-0.1}$	$30^{+0.013}_{-0.1}$	$35^{+0.016}_{-0.1}$
BC	7	8	8.5	9	11	13	14
BD	0.5	0.8	0.8	1	1.2	1.5	1.5
BE	4.2	4.5	5	5.5	6.5	7.5	8.5
BF	4.3	5.3	6.8	9	11	14	18
(BG)	M5×0.8	M6×1	M8×1.25	M10×1.5	M12×1.75	M16×2	M20×2.5
CA	$6.5H6^{+0.009}_{0}$	$8H6^{+0.009}_{0}$	$10H6^{+0.009}_{0}$	$12H6^{+0.011}_{0}$	$15H6^{+0.011}_{0}$	$18H6^{+0.011}_{0}$	$23H6^{+0.013}_{0}$
CB	$6.5^{+0.009}_{-0.1}$	$8^{+0.009}_{-0.1}$	$10^{+0.009}_{-0.1}$	$12^{+0.011}_{-0.1}$	$15^{+0.011}_{-0.1}$	$18^{+0.011}_{-0.1}$	$23^{+0.013}_{-0.1}$
CC	4.5	5	5	5	6	7	7
CD	3.5	4	4	4	5	5.5	5.5
CE	M4×0.7	M5×0.8	M6×1	M8×1.25	M10×1.5	M12×1.75	M16×2

Notes :

1. Special tool (Model：ZZV0010-□) or equivalent is needed when inserting VXF□-B.
   Special tool (Model：ZZV0010-□) is not included with VXF□-B. Please order separately. (Refer to P.1205)
2. Mounting bolts are sold separately.

Mounting and Removing

When Mounting

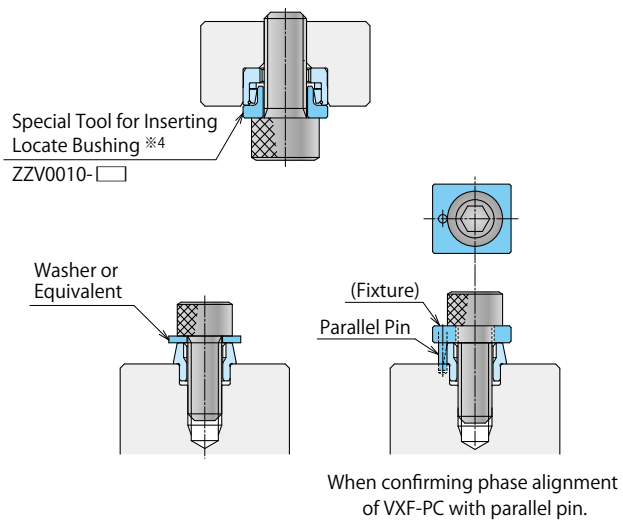

When Removing

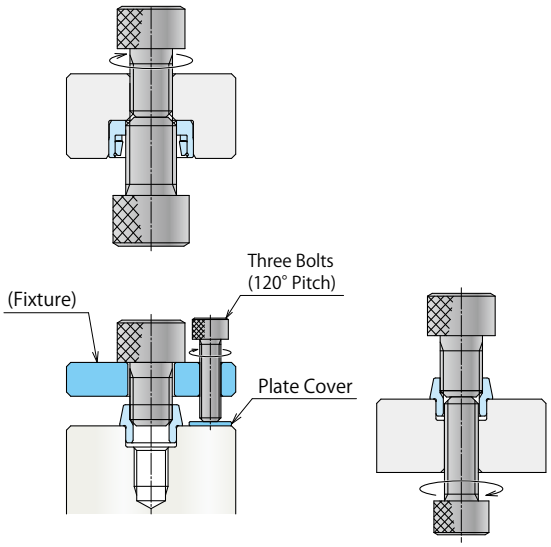

Note :

※4. Special tool (Model：ZZV0010-□) or equivalent is needed when inserting VXF□-B.
Special tool (Model：ZZV0010-□) is not included with VXF□-B. Please order separately.

Options：Special Tool for Inserting Locate Bushing

Model No. Indication

ZZV0010 - 060

Size (See the list on the right)

Design No. (Revision Number)

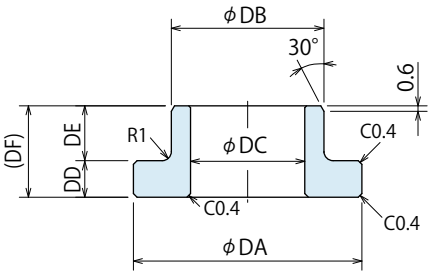

External Dimensions

(mm)

Model No.	ZZV0010-040	ZZV0010-050	ZZV0010-060	ZZV0010-080	ZZV0010-100	ZZV0010-120	ZZV0010-160
Corresponding Product Model	VXF0040-B	VXF0050-B	VXF0060-B	VXF0080-B	VXF0100-B	VXF0120-B	VXF0160-B
DA	$13^{-0.2}_{-0.5}$	$16^{-0.2}_{-0.5}$	$18^{-0.2}_{-0.5}$	$20^{-0.2}_{-0.5}$	$25^{-0.2}_{-0.5}$	$30^{-0.2}_{-0.5}$	$35^{-0.2}_{-0.5}$
DB	$7.6^{0}_{-0.2}$	$9.4^{0}_{-0.2}$	$11.4^{0}_{-0.2}$	$13.2^{0}_{-0.2}$	$16.7^{0}_{-0.2}$	$20.1^{0}_{-0.2}$	$24.8^{0}_{-0.2}$
DC	5.5	6.7	8.5	10.5	12.5	16.5	20.5
DD	3	3	3	3	4	5	5
DE	4.3	4.5	4.5	4.5	6	7	8
DF	7.3	7.5	7.5	7.5	10	12	13

Note :

1. Special tool (Model：ZZV0010-□) or equivalent is needed when inserting VXF□-B.
   Please determine the number of tools required when ordering.

Reference Data: Bolt Axial Force and Tightening Torque (Torque Method)

Reference Calculation of Tightening Force (Axial Force). (Not a guaranteed value.)

This is extracted and edited from catalogs of Kyokuto MFG Co., Ltd. and Gosho Works Ltd.

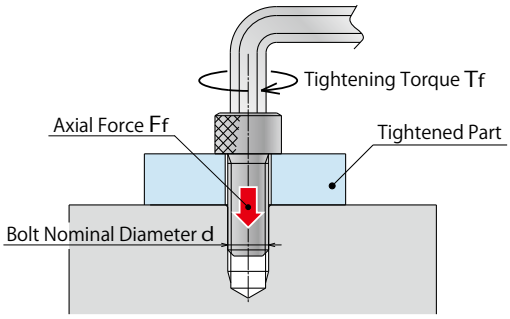

Allowable Max. Axial Force Calculation Formula

$$F_{fmax} = 0.7 \times \sigma y \times As$$

Appropriate Tightening Torque Calculation Formula

$$T_{fA} = \frac{0.35 \times K \times (1+1/Q) \times \sigma y \times As \times d}{1000}$$

【Reference Value】Tightening Force (Axial Force) Calculation Formula

$$F_f = \frac{T_f}{K \times d}$$

F_{fmax} : Allowable Max. Axial Force [kN]
As : Bolt Effective Cross Section Area [mm²]
σy : Yield Stress or Proof Strength

Strength Grade	8.8(d≦16)	8.8(d>16)	10.9	12.9
σy [N/mm²]	640	660	940	1100

T_{fA} : Appropriate Tightening Torque [N·m]
K : Torque Coefficient
Q : Tightening Coefficient
d : Bolt Nominal Diameter [mm]
F_f : Tightening Force (Axial Force) [kN]
T_f : Tightening Torque [N・m]
TfA is assigned in the table below.

Nominal × Pitch	Bolt Effective Cross Section Area As [mm²]	Strength Grade 12.9				Strength Grade 10.9				Strength Grade 8.8			
		Yield Load [kN]	Allowable Max. Axial Force Ffmax [kN]	Appropriate Tightening Torque TfA [N・m]	Tightening Force【Reference】Ff [kN]	Yield Load [kN]	Allowable Max. Axial Force Ffmax [kN]	Appropriate Tightening Torque TfA [N・m]	Tightening Force【Reference】Ff [kN]	Yield Load [kN]	Allowable Max. Axial Force Ffmax [kN]	Appropriate Tightening Torque TfA [N・m]	Tightening Force【Reference】Ff [kN]
M4×0.7	8.78	9.6	6.7	3.9	(5.8)	8.3	5.8	3.3	(4.9)	5.6	3.9	2.3	(3.3)
M5×0.8	14.2	15.6	10.9	7.9	(9.3)	13.4	9.3	6.8	(8.0)	9.1	6.4	4.6	(5.4)
M6×1	20.1	22.1	15.5	13.5	(13.3)	18.9	13.2	11.6	(11.3)	12.9	9.0	7.8	(7.7)
M8×1.25	36.6	40.2	28.1	32.8	(24.1)	34.4	24.1	28.0	(20.6)	23.4	16.4	19.1	(14.1)
M10×1.5	58.0	63.7	44.6	65.0	(38.2)	54.5	38.2	55.6	(32.7)	37.1	26.0	37.9	(22.3)
M12×1.75	84.3	92.6	64.8	114	(55.8)	79.3	55.5	97.1	(47.6)	54.0	37.8	66.1	(32.4)
M16×2	157	172	121	281	(103)	148	103	241	(88.7)	101	70.4	164	(60.2)

Notes :
1. Tightening Condition : Tightened by torque wrench. Surface Oil Lubrication. Torque Coefficient K=0.17, Tightening Coefficient Q=1.4
2. Torque coefficient and tightening coefficient may vary depending on the conditions of use. Use this table as a reference.
   For further information, please refer to JIS B 1083, JIS B 1084 or catalogs of bolt makers.
3. This table is extracted and edited from the catalog of Kyokuto MFG Co., Ltd.
   Tightening force【Reference】Ff is a reference value of tightening force (axial force) when tightening with appropriate tightening torque TfA.
   Tightening force should be calculated from the actual tightening torque.
   Consider the tightening torque and calculate the strength as the bolt seating surface must not depress tightened part.

Reference Data: Mounting Jig

Sample jig design for mounting and phasing VXF□-PC with parallel pins.

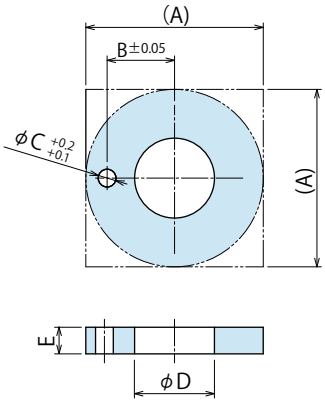

External Dimensions (mm)

Corresponding Product Model	VXF0040-PC	VXF0050-PC	VXF0060-PC	VXF0080-PC	VXF0100-PC	VXF0120-PC	VXF0160-PC
A	(18 or more)	(18 or more)	(20 or more)	(20 or more)	(25 or more)	(30 or more)	(40 or more)
B	4.7	5.6	6.5	7.6	9.6	11.4	14.4
C	1.5	1.5	1.5	2	2.5	3	4
D	4.5	5.5	6.8	9	11	14	18
E	(3)	(3)	(3)	(3)	(5)	(5)	(5)
F	6.5 or more	7 or more	7 or more	7.5 or more	9.5 or more	11 or more	12 or more
G	(2)	(2)	(2)	(2)	(3)	(3)	(3)
K	4.5	5	5	5	6	7	7
Mounting Bolt※1	M4×0.7	M5×0.8	M6×1	M8×1.25	M10×1.5	M12×1.75	M16×2
Parallel Pin※2	φ1.5 (h8)	φ1.5 (h8)	φ1.5 (h8)	φ2 (h8)	φ2.5 (h8)	φ3 (h8)	φ4 (h8)

Notes : ※1. Determine the mounting bolt length according to screw length of base plate.
※2. Determine the parallel pin length according to G dimension.

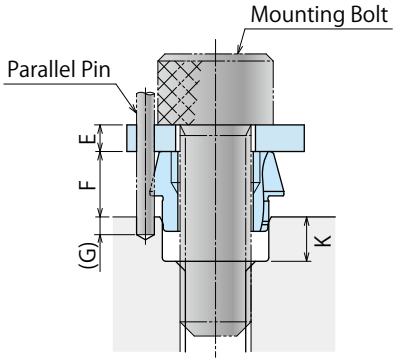

VXF-PC Phase

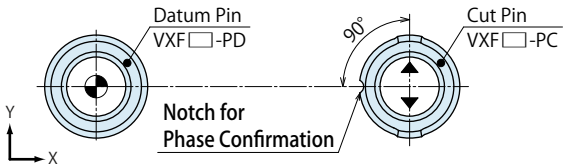

Align the notch of VXF-PC perpendicular to the center of VXF-PD.

Reference Data: Removing Jig

Sample jig design for removing VXF□-PD/PC.

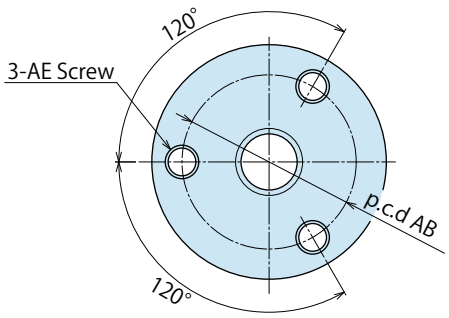

External Dimensions (mm)

Corresponding Product Model	VXF0040-P□	VXF0050-P□	VXF0060-P□	VXF0080-P□	VXF0100-P□	VXF0120-P□	VXF0160-P□
AA	(30 or more)	(30 or more)	(35 or more)	(35 or more)	(40 or more)	(48 or more)	(56 or more)
AB	20	20	26	26	30	36	45
AC	10	10	10	12	16	16	16
AD	M5×0.8	M6×1	M8×1.25	M10×1.5	M12×1.75	M16×2	M20×2.5
AE	M5×0.8	M5×0.8	M5×0.8	M5×0.8	M6×1	M6×1	M6×1
AF Bolt	M5×0.8×16 or more	M6×1×16 or more	M8×1.25×16 or more	M10×1.5×20 or more	M12×1.75×25 or more	M16×2×25 or more	M20×2.5×30 or more
AG Bolt	M5×0.8×20 or more	M5×0.8×20 or more	M5×0.8×20 or more	M5×0.8×25 or more	M6×1×30 or more	M6×1×30 or more	M6×1×30 or more

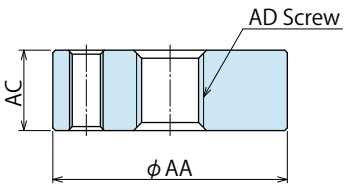

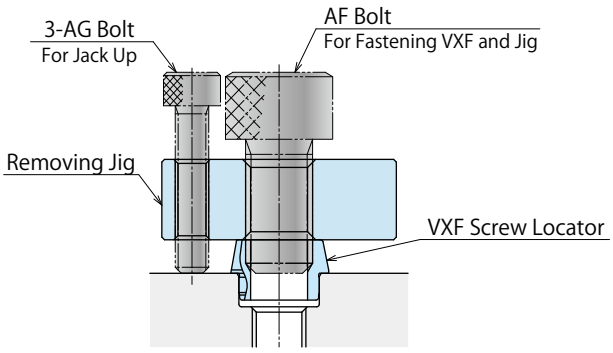

Removing Method

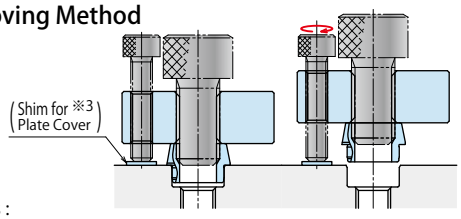

Notes :
1. Use jack up bolt and remove the product parallel.
※3. Able to prevent damage on the jig by using shims.

Other Removing Method

Turn the flat part of the jig with a spanner for jack up.

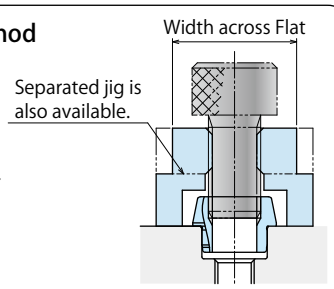

Cautions

1) Locating in the directions of the X and Y axis

- The reference position (origin) is determined by VXF-PD (Datum: for reference locating).
- VXF-PC (Cut: for one direction locating) only locates in one direction (Y-axis direction).
- **Please follow the illustration below about Cut pin (VXF-PC) phase alignment.**

VXF-PC Phase

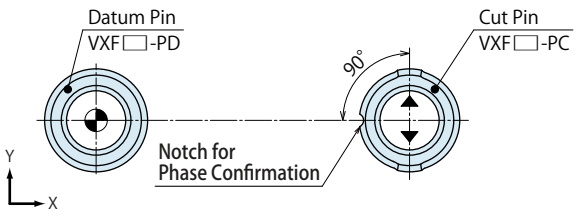

- Please align the notch of VXF-PC perpendicular to the center of VXF-PD.

2) When the pallet is in vertical position.

- Please prepare and secure precautionary measures to prevent injury from fixture plate falling off.
- When the pallet is used in vertical position (hanging on the wall), the internal moving parts tend to wear out. Confirm the positioning precision in a regular manner. In case the allowed range is exceeded, change the machine.
- Refer to the vertical mounting fixture specification of Max. allowable loading weight.

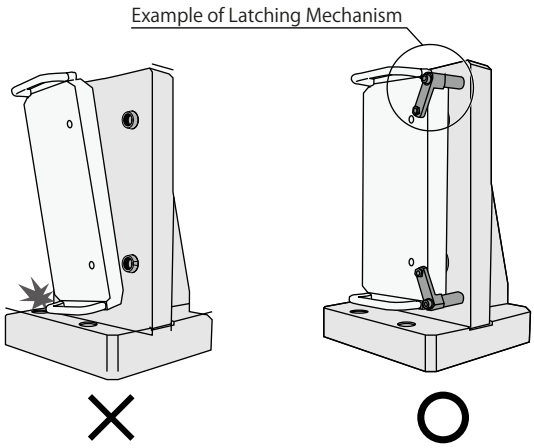

3) About the reference surface towards Z-axis.

- Z-axis direction datum surface is determined by customers base plate and pallet specifications.

4) Setting of Rough Guide

- Prepare rough guide pin to prevent damaging taper surfaces on "Screw Locator" , when setting up the fixture plate . Otherwise locating accuracy is affected.

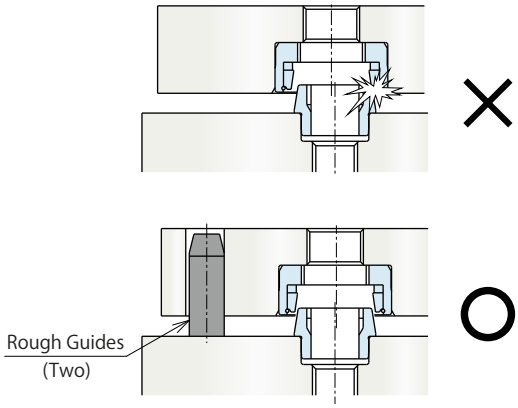

5) Check Specifications

- Operate locating manually.
- This product is made only for locating. It does not have clamping function.
- **Bolt tightening procedure is to tighten VXF-PD : Datum (round) first then VXF-PC : Cut (Diamond).**
  Tighten VXF-PD first then tighten VXF-PC. After securing VXF "Screw Locator's", tighten the remaining bolts.

6) Regarding special tool for VXF□-B mounting.

- Special tool (Model : ZZV0010-□) or equivalent is needed when inserting VXF□-B. (See P.1205)
  Special tool (Model : ZZV0010-□) is not included with VXF□-B. Please order separately.

7) Use washers.

- Washers are recommended to prevent damaging plate surfaces.

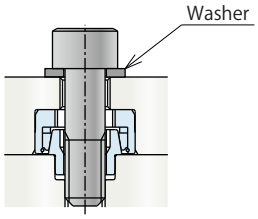

8) For tightening (clamping) a point other than the center of VXF.

- When tightening (clamping) a point other than the center of VXF, it is required to clamp with more than the minimum tightening force of specifications. Calculate the required tightening force by using the calculation formula below.

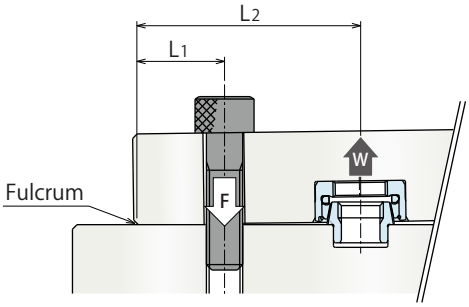

$$\text{Required Tightening Force } F > \frac{\text{Minimum Tightening Force } W \times L_2 \times \text{Safety Factor (2 or more)}}{L_1}$$

- When pallet or plate has low rigidity and tightening (clamping) other than the center of VXF, it may deform the pallet or plate.

Maintenance and Inspection

1) Make sure Screw Locator is securely inserted.

High-Power Series
Pneumatic Series
Hydraulic Series
Valve / Coupler Hydraulic Unit
Manual Operation Accessories
Cautions / Others
Screw Locator
VXF
Manual Expansion Locating Pin
VX
Manifold Block
WHZ-MD
LZY-MD
LZ-MS
LZ-MP
TMZ-1MB
TMZ-2MB
DZ-M
Manifold Block / Nut
DZ-R
DZ-C
DZ-P
DZ-B
LZ-S
LZ-SQ
TNZ-S
TNZ-SQ
WNZ-SQ
Pressure Switch
JBA
Pressure Gauge
JGA/JGB
Manifold
JX
Coupler Switch
PS
G-Thread Fitting

※ Please refer to P.1239 for common cautions. • Notes on Handling • Maintenance/Inspection • Warranty

Cautions

Notes on Handling

1) It should be handled by qualified personnel.
- The hydraulic machine and air compressor should be handled and maintained by qualified personnel.

2) Do not handle or remove the machine unless the safety protocols are ensured.
① The machine and equipment can only be inspected or prepared when it is confirmed that the preventive devices are in place.
② Before the machine is removed, make sure that the above-mentioned safety measures are in place. Shut off the air of hydraulic source and make sure no pressure exists in the hydraulic and air circuit.
③ After stopping the machine, do not remove until the temperature cools down.
④ Make sure there is no abnormality in the bolts and respective parts before restarting the machine or equipment.

3) Do not touch clamp (cylinder) while clamp (cylinder) is working. Otherwise, your hands may be injured due to clinching.

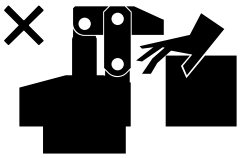

4) Do not disassemble or modify.
- If the equipment is taken apart or modified, the warranty will be voided even within the warranty period.

Maintenance and Inspection

1) Removal of the Machine and Shut-off of Pressure Source
- Before the machine is removed, make sure that the above-mentioned safety measures are in place. Shut off the air of hydraulic source and make sure no pressure exists in the hydraulic and air circuit.
- Make sure there is no abnormality in the bolts and respective parts before restarting.

2) Regularly clean the area around the piston rod and plunger.
- If it is used when the surface is contaminated with dirt, it may lead to packing seal damage, malfunctioning, fluid leakage and air leaks.

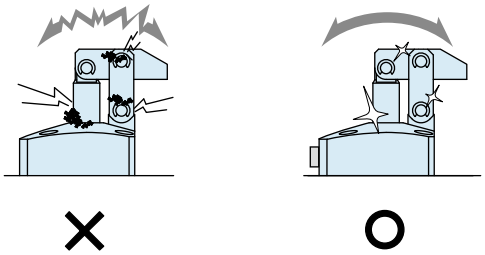

3) Please clean out the reference surface regularly (taper reference surface and seating surface) of locating machine. (VS/VT/VFL/VFM/VFJ/VFK/WVS/VWM/VWK/VX/VXF)
- Location products, except VX/VXF model, can remove contaminants with cleaning functions.
  When installing pallets makes sure there is no thick sludge like substances on pallets.
- Continuous use with dirt on components will lead to locating functions not work properly, leaking and malfunction.

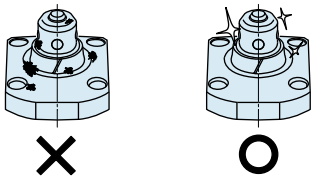

4) If disconnecting by couplers on a regular basis, air bleeding should be carried out daily to avoid air mixed in the circuit.

5) Regularly tighten nuts, bolts, pins, cylinders and pipe line to ensure proper use.

6) Make sure the hydraulic fluid has not deteriorated.

7) Make sure there is smooth action and no abnormal noise.
- Especially when it is restarted after left unused for a long period, make sure it can be operated correctly.

8) The products should be stored in the cool and dark place without direct sunshine or moisture.

9) Please contact us for overhaul and repair.

Warranty

1) Warranty Period

- The product warranty period is 18 months from shipment from our factory or 12 months from initial use, whichever is earlier.

2) Warranty Scope

- If the product is damaged or malfunctions during the warranty period due to faulty design, materials or workmanship, we will replace or repair the defective part at our expense.
  Defects or failures caused by the following are not covered.

① If the stipulated maintenance and inspection are not carried out.
② If the product is used while it is not suitable for use based on the operator's judgment, resulting in defect.
③ If it is used or handled in inappropriate way by the operator.
(Including damage caused by the misconduct of the third party.)
④ If the defect is caused by reasons other than our responsibility.
⑤ If repair or modifications are carried out by anyone other than Kosmek, or without our approval and confirmation, it will void warranty.
⑥ Other caused by natural disasters or calamities not attributable to our company.
⑦ Parts or replacement expenses due to parts consumption and deterioration.
(Such as rubber, plastic, seal material and some electric components.)

Damages excluding from direct result of a product defect shall be excluded from the warranty.

High-Power Series
Pneumatic Series
Hydraulic Series
Valve / Coupler Hydraulic Unit
Manual Operation Accessories
Cautions / Others

Cautions
Installation Notes (For Hydraulic Series)
Hydraulic Fluid List
Notes on Hydraulic Cylinder Speed Control Circuit
Notes on Handling
Maintenance/ Inspection
Warranty

Company Profile
Company Profile
Our Products
History

Index
Search by Alphabetical Order

Sales Offices

Auto Coupler

Model JVA/JVB

For Oil/Air/Coolant
(Operating Pressure Range: lower than 7MPa)

What is Auto Coupler?

Auto coupler, which is designed to connect a variety of flow circuits, is suitable for automation and fits in small spaces.
We offer them based on your requirement.

※ Auto coupler does not have non-leak mechanism.
In case you need non-leak function, please refer to 'Non-Leak Coupler' on P.1015.

JVA/JVB Feature

It is suitable for connecting and disconnecting the hydraulic circuit on changeover of fixture pallets and tombstones.
Threaded auto coupler can be used with "Screw Locator (VXF)".

Action Description

Disconnected State

JVA (Fixture Side)

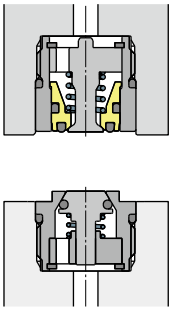

JVB (Pressure Source Side)

In the Process of Connecting (During Pallet Setting)

① Using without "Screw Locator"
Reaction force is not generated at the distance of 1mm or further than the connection setting dimensions (33.5mm).
Reaction force is generated at the distance of 1mm or less than the connection setting dimensions (33.5mm).

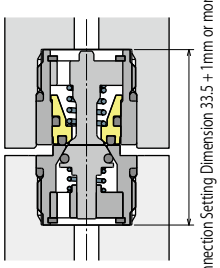

Connected State

The reaction force is created by both spring and the supply pressure.

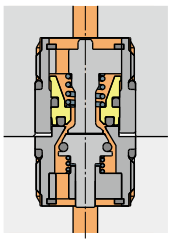

② Using with "Screw Locator"
Reaction force (spring force) is working when setting up the pallet because the stroke of "Screw Locator" is 0.2~0.3mm.
Pallet may float if the weight of the pallet is light.

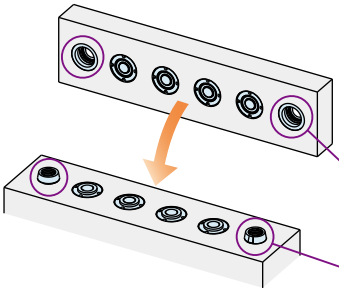

Example with "Screw Locator"

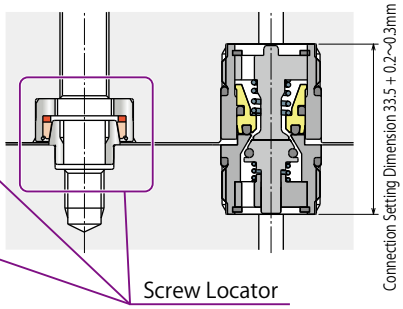

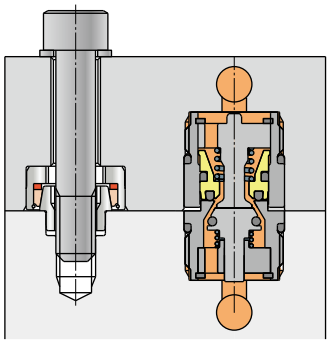

Model No. Indication

JV B 020 0 - W

1 2 3

1 Style

A : O-ring side of Connection Surface (Fixture Side)

B : Metal Side of Connection Surface (Pressure Source Side)

2 Design No.

0 : Revision Number

3 Material

W : Stainless Steel, Brass, NBR
(Recommended Fluid : General Hydraulic Oil / Air)

H : Stainless Steel, Brass, Fluor Rubber
(Recommended Fluid : Coolant)

Specifications

Model No.		Fixture Side	JVA0200-□
		Pressure Source Side	JVB0200-□
Max. Operating Pressure MPa			7.0
Withstanding Pressure MPa			10.5
Min. Passage Area mm^2			12.6
Offset Tolerance mm			±0.5
Angular Deviation (Tolerance) DEG.			0.3
Operating Temperature ℃			0 ~ 70
Usable Fluid	3	Material **W**	General Hydraulic Oil Equivalent to ISO-VG-32・Air
	3	Material **H**	Coolant
Reaction Force kN	Operating Pressure	at 7 MPa	1.12
		at 1 MPa	0.19
		at P MPa	0.154 × P + 0.04
Mass g		JVA	30
		JVB	24

Circuit Symbol

JVA (Outgoing Side / Fixture Side)

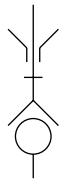

JVB (Incoming Side / Pressure Source Side)

※ Zero oil leak out of JVA in disconnected state

Supply Pressure-Reaction Force Graph

The graph shows the relationship between the reaction force and the supply pressure after the completion of connection of JVA/JVB.

Operating Pressure (MPa)	Reaction Force (kN)
0	0.04
1	0.19
2	0.35
3	0.50
4	0.66
5	0.81
6	0.96
7	1.12

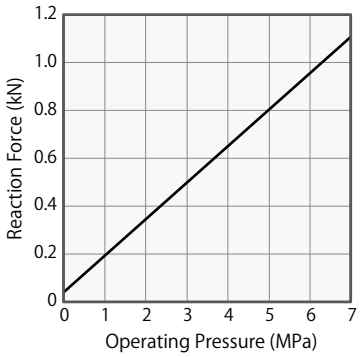

Flow Rate - Pressure Loss Characteristic Graph

The fluid used on this data is general hydraulic oil equivalent to ISO-VG-32 (30~40℃).

Flow Rate (ℓ/min)	Pressure Loss (MPa)
0	0
5	0.29
10	0.66
15	1.12
20	1.64
25	2.27
30	2.98

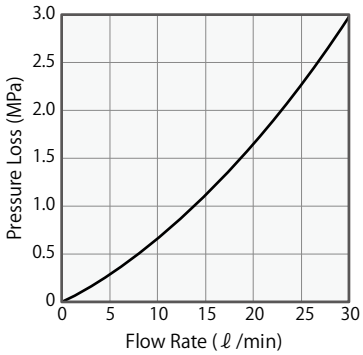

External Dimensions（JVA/JVB）

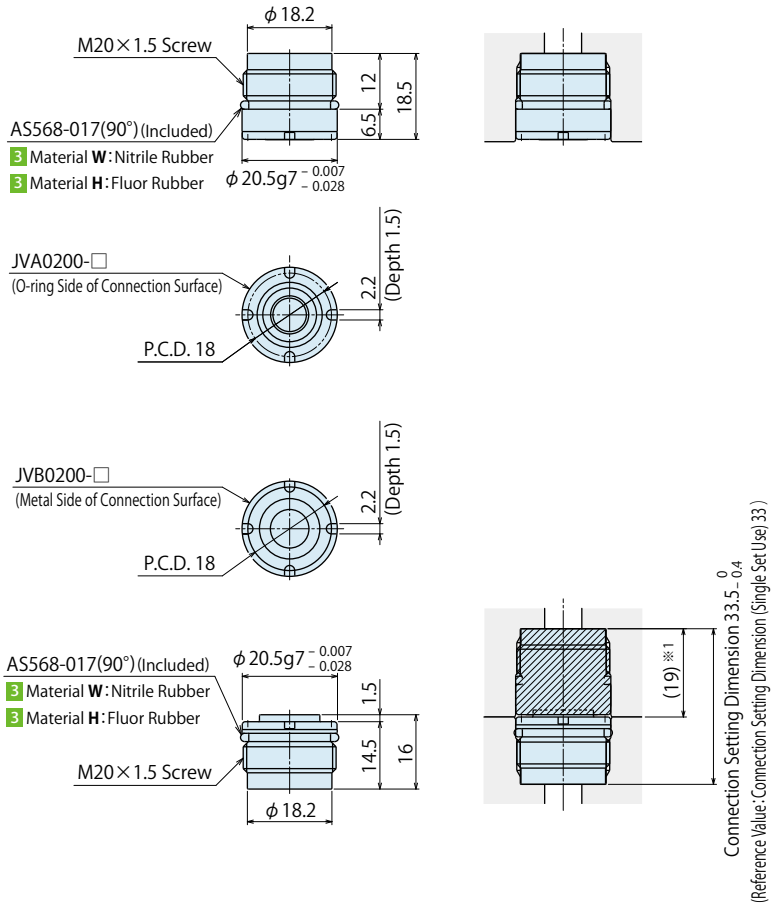

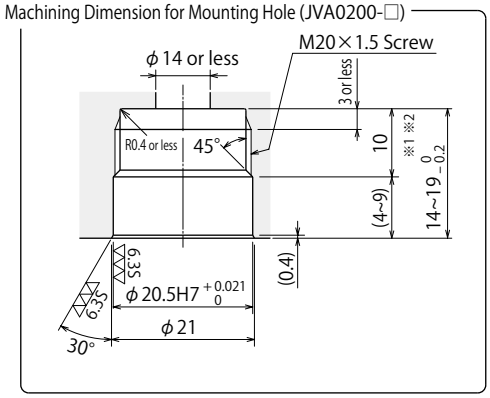

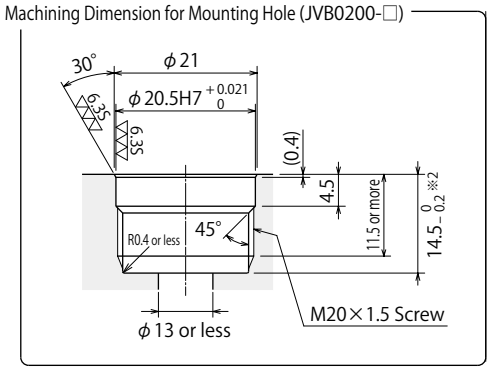

Model No.	Thread Size	Tightening Torque (N·m)
JVA0200-□ **JVB0200-□**	M20×1.5	16

Notes :

1. When ※1 dimension is 19mm, clearance between base plate and pallet is 0mm.
   When ※1 dimension is 14mm, clearance between base plate and pallet is 5mm.
2. For the tolerance of ※2, when using with the pallet clamp (Lift-Up Stroke 1mm) and it is required to prevent the force of spring in JV, the tolerance of each machining depth should be ±0.05mm. (Connection Set Length：33.5±0.10mm)
3. Mounting Jig (Model ZZJ0020) or equivalent is required when installing and removing JVA/JVB. Mounting Jig (Model ZZJ0020) is not included with JVA/JVB. Please order separately.

Accessary：Mounting Jig for JVA/JVB

JVA/JVB is mounted with this mounting jig.
Tightening Torque：16N·m

Model No. indication

ZZJ0020

Design No.
(Revision Number)

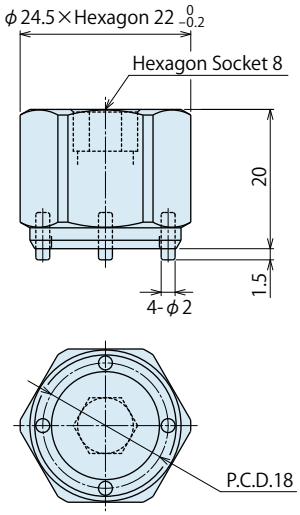

Note :

1. Mounting Jig (Model ZZJ0020) or equivalent is required when installing and removing JVA/JVB. Please determine the number of jigs required when ordering.

Cautions (JVA/JVB)

1. Do not connect or disconnect when the auto coupler has received the pressure from the source. (Please refer to Circuit Reference.)
2. Drain out air within the circuit before use (When usable fluid is oil).
3. Do not connect in the condition that foreign substances such as chips adhered on the connecting surfaces. Completely remove the adhering chips or coolant by air blow etc.
4. Load applied on a fixture side actuator in the separate condition may result in oil flowing out from the end of auto coupler.
5. Exceeding allowable offset will cause damage on to the internal parts. It is recommended to install guide pins.
6. When pressing up to the connection limit, the force should be higher than the reaction force and lower than 3.0kN
7. Use Mounting Jig (Model ZZJ0020) or equivalent for installation and removal.

Circuit Reference

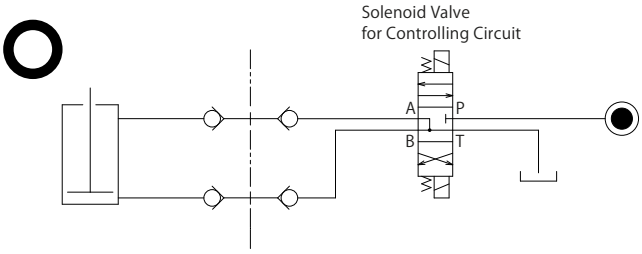

Use a three position (center position, ABT connection) solenoid valve for controlling circuit, and stop supplying hydraulic (or air) pressure with the center position when connecting/disconnecting JVA/JVB.

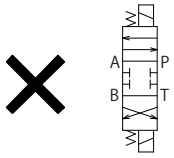

Do not connect or disconnect when the auto coupler has received the pressure from the source.

High-Power Series
Pneumatic Series
Hydraulic Series
Valve / Coupler Hydraulic Unit
Manual Operation Accessories
Cautions / Others

Air Sequence Valve
BWD

Hydraulic Non-Leak Coupler
BGA/BGB
BGC/BGD
BGP/BGS
BBP/BBS
BNP/BNS
BJP/BJS
BFP/BFS

Auto Coupler
JVA/JVB
JVC/JVD
JVE/JVF
JNA/JNB
JNC/JND
JLP/JLS

Rotary Joint
JR

Hydraulic Valve
BK
BEQ
BT
BLS/BLG
BLB
JSS/JS
JKA/JKB
BMA/BMG
AU/AU-M
BU
BP/JPB
BX
BEP/BSP
BH
BC

Air Hydraulic Unit
CV
CK
CP/CPB
CPC/CQC
CB
CC
AB/AB-V
AC/AC-V

Sales Offices

Sales Offices across the World

Japan Overseas Sales	**TEL. +81-78-991-5162**	FAX. +81-78-991-8787
	KOSMEK LTD. 1-5, 2-chome, Murotani, Nishi-ku, Kobe-city, Hyogo, Japan 651-2241 〒651-2241 兵庫県神戸市西区室谷2丁目1番5号	
USA KOSMEK（USA）LTD.	**TEL. +1-630-620-7650**	FAX. +1-630-620-9015
	650 Springer Drive, Lombard, IL 60148 USA	
Mexico KOSMEK USA Mexico Office	**TEL. +52-442-161-2347**	
	Blvd Jurica la Campana 1040, B Colonia Punta Juriquilla Queretaro, QRO 76230 Mexico	
EUROPE KOSMEK EUROPE GmbH	**TEL. +43-463-287587**	FAX. +43-463-287587-20
	Schleppeplatz 2 9020 Klagenfurt am Wörthersee Austria	
China KOSMEK（CHINA）LTD. 考世美(上海)貿易有限公司	**TEL.+86-21-54253000**	FAX.+86-21-54253709
	Room601, RIVERSIDE PYRAMID No.55, Lane21, Pusan Rd, Pudong Shanghai 200125, China 中国上海市浦东新区浦三路21弄55号银亿滨江中心601室200125	
India KOSMEK LTD. - INDIA	**TEL.+91-9880561695**	
	F 203, Level-2, First Floor, Prestige Center Point, Cunningham Road, Bangalore -560052 India	
Thailand Thailand Representative Office	**TEL. +66-2-300-5132**	FAX. +66-2-300-5133
	67 Soi 58, RAMA 9 Rd., Suanluang, Suanluang, Bangkok 10250, Thailand	
Taiwan (Taiwan Exclusive Distributor) Full Life Trading Co., Ltd. 盈生貿易有限公司	**TEL. +886-2-82261860**	FAX. +886-2-82261890
	16F-4, No.2, Jian Ba Rd., Zhonghe District, New Taipei City Taiwan 23511 台湾新北市中和區建八路2號 16F－4（遠東世紀廣場）	
Philippines (Philippines Exclusive Distributor) G.E.T. Inc, Phil.	**TEL.+63-2-310-7286**	FAX. +63-2-310-7286
	Victoria Wave Special Economic Zone Mt. Apo Building, Brgy. 186, North Caloocan City, Metro Manila, Philippines 1427	
Indonesia (Indonesia Exclusive Distributor) P.T PANDU HYDRO PNEUMATICS	**TEL. +62-21-5818632**	FAX. +62-21-5814857
	Ruko Green Garden Blok Z-Ⅱ No.51 Rt.005 Rw.008 Kedoya Utara-Kebon Jeruk Jakarta Barat 11520 Indonesia	

Sales Offices in Japan

Head Office Osaka Sales Office Overseas Sales	**TEL.078-991-5115**	FAX.078-991-8787
	〒651-2241 兵庫県神戸市西区室谷2丁目1番5号	
Tokyo Sales Office	**TEL.048-652-8839**	FAX.048-652-8828
	〒331-0815 埼玉県さいたま市北区大成町4丁目81番地	
Nagoya Sales Office	**TEL.0566-74-8778**	FAX.0566-74-8808
	〒446-0076 愛知県安城市美園町2丁目10番地1	
Fukuoka Sales Office	**TEL.092-433-0424**	FAX.092-433-0426
	〒812-0006 福岡県福岡市博多区上牟田1丁目8-10-101	

Global Network

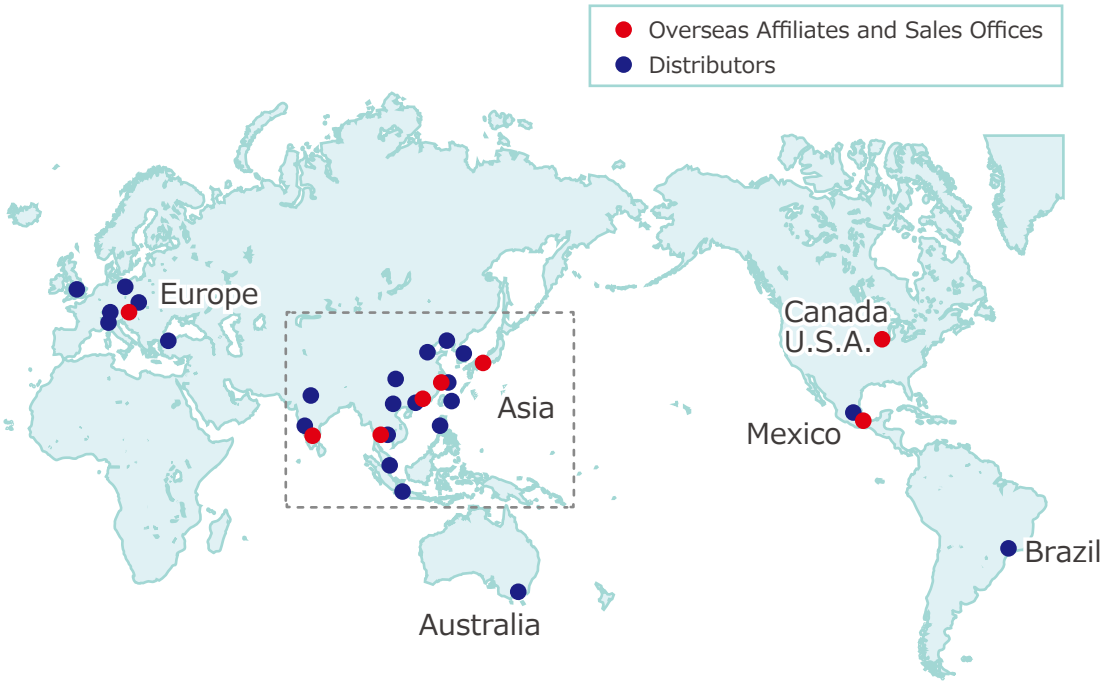

Asia Detailed Map

KOSMEK
Harmony in Innovation

- FOR FURTHER INFORMATION ON UNLISTED SPECIFICATIONS AND SIZES, PLEASE CALL US.
- SPECIFICATIONS IN THIS CATALOG ARE SUBJECT TO CHANGE WITHOUT NOTICE.

ISO 9001
JQA-QMA10823
KOSMEK HEAD OFFICE
MS JAB CM009