New 1-Port Sensing Swing/Link Clamp・Lift Cylinder

One Air Port Can Detect Both Clamp and Unclamp Actions
Completely New Sensing Mechanism

Model LKV
Link Clamp

Model LLV
Lift Cylinder

Model LHV
Swing Clamp

KOSMEK
Harmony in Innovation

1-Port Sensing Link Clamp Hydraulic Double Action

Model LKV

One Air Port Can Detect Both Clamp and Unclamp Actions

Suitable for Automated Application with Completely New Sensing Mechanism

NEW

One Air Port to Confirm Clamp and Unclamp Actions

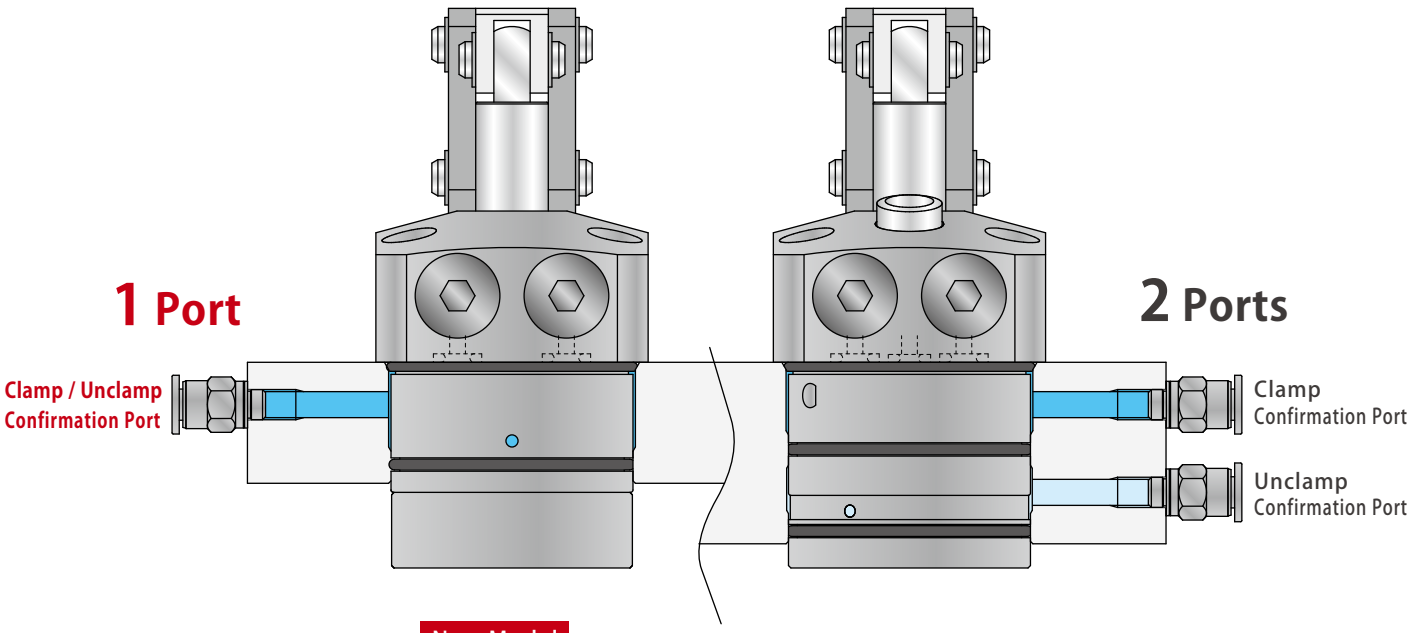

New Model

New Mechanism

model LKV
1-Port Sensing Link Clamp

Current

model LKW

Application Examples

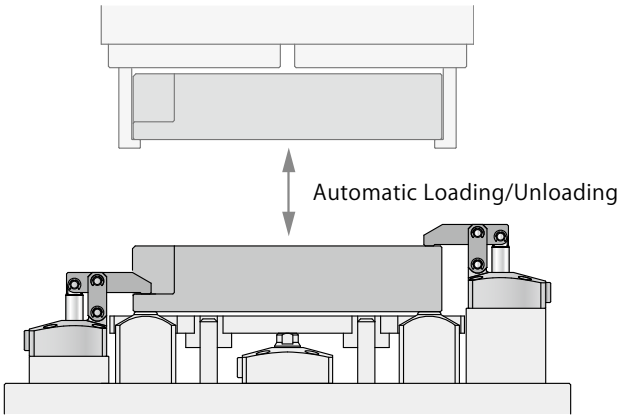

For Automated Setup
Requiring Action Confirmation

Cross Section

Excellent Coolant Resistance

Our exclusive dust seal is designed to protect against high pressure coolant. It also has high durability against chlorine-based coolant by using a sealing material with excellent chemical resistance.

Direct Mount Speed Control Valve

Speed control valve with air bleeding function can be directly mounted to the product. (Speed control valve is sold separately.)

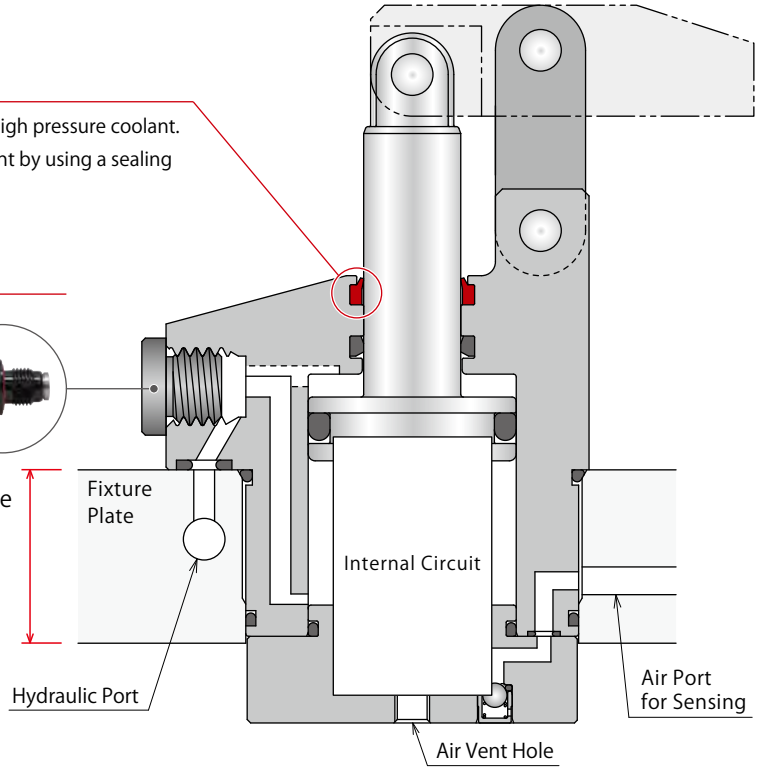

Minimized Number of Sensors

Using with a two-output air sensor allows for one sensing air port, confirms both clamp and unclamp actions and reduces the number of sensors.

1-Port Sensing
Reduces the
Number of Sensors

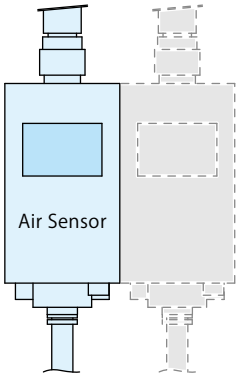

Minimized Number of Ports・Simple Machining

Integrating ports allows for reducing the number of ports for Rotary Joint and machining for air passage of fixture plate, and simplifying the machining of mounting hole. etc.

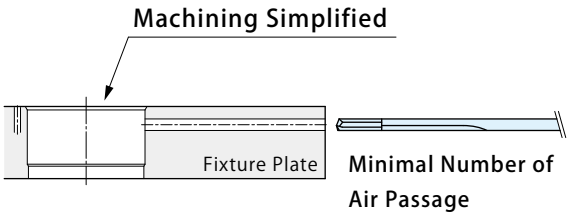

Action Description (Cross Section)

Clamp

Clamp (During Hyd. Pressure Supply to Clamping Port)

The piston rod ascends and clamps the workpiece.

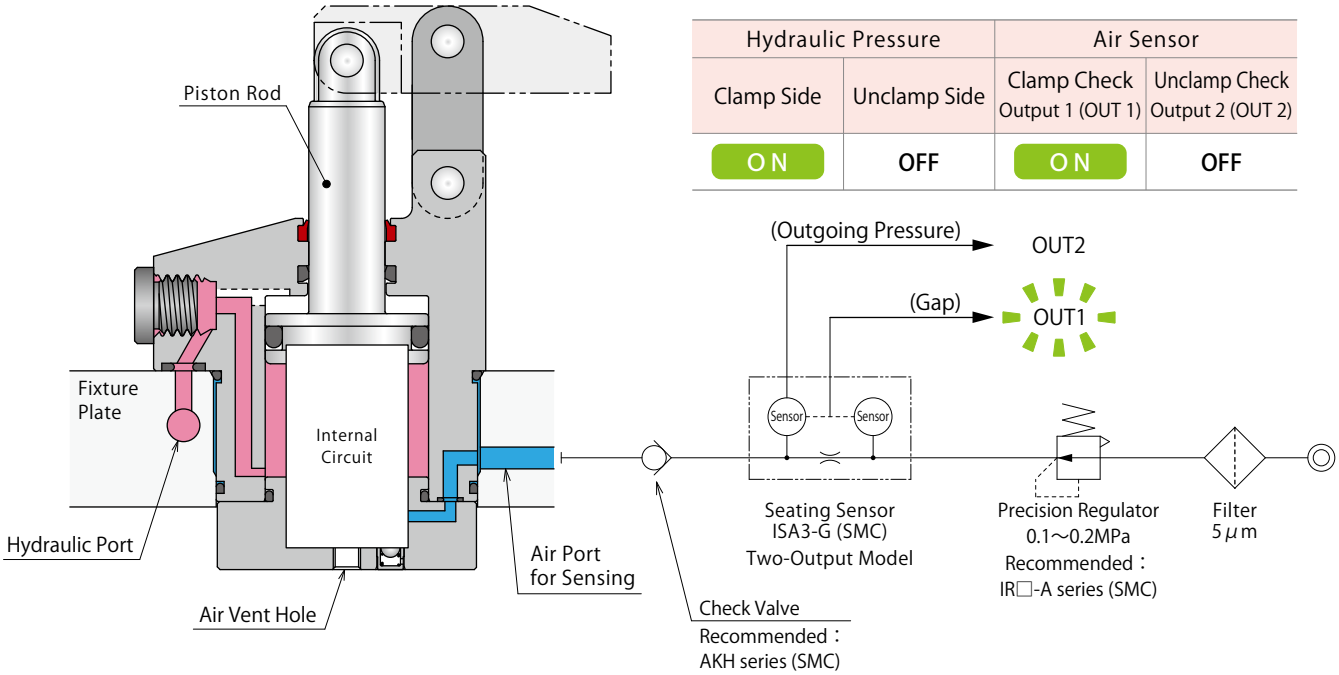

Hydraulic Pressure		Air Sensor	
Clamp Side	Unclamp Side	Clamp Check Output 1 (OUT 1)	Unclamp Check Output 2 (OUT 2)
ON	OFF	ON	OFF

Unclamp

Unclamp (During Hyd. Pressure Supply to Unclamping Port)

The piston rod descends.

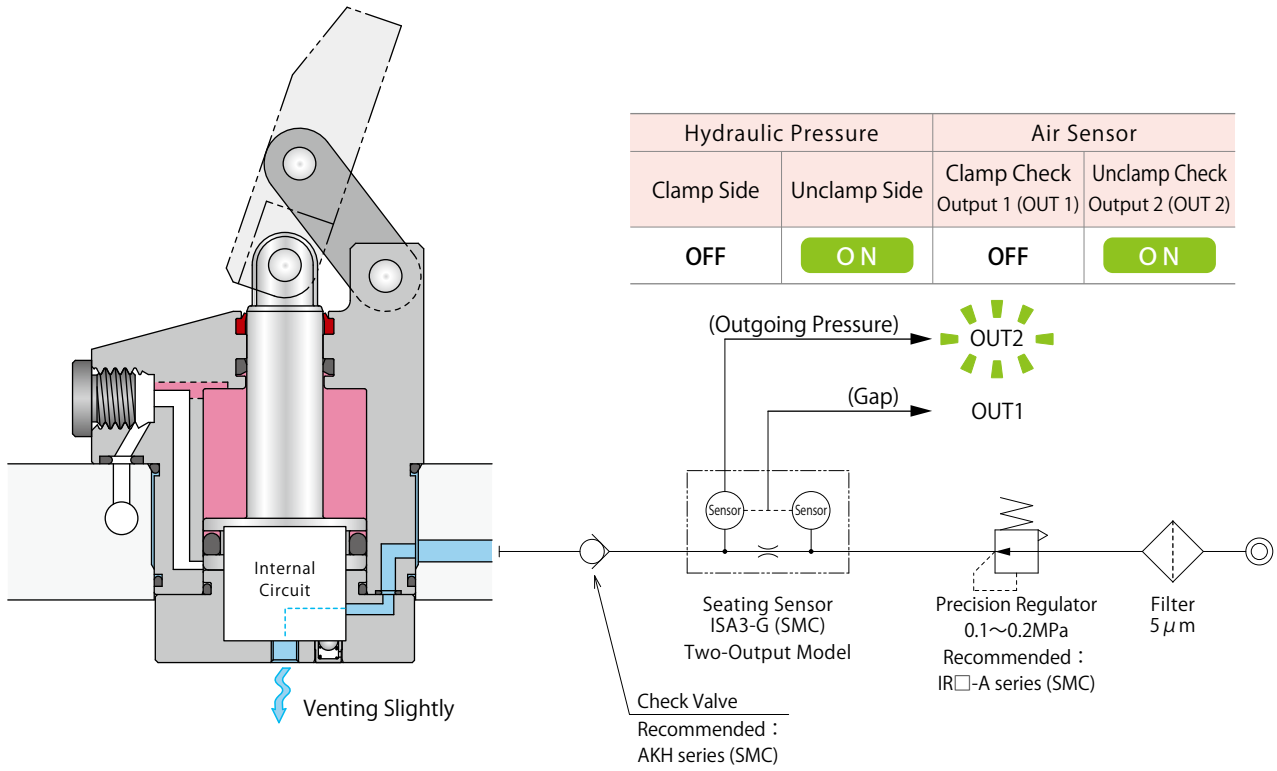

Hydraulic Pressure		Air Sensor	
Clamp Side	Unclamp Side	Clamp Check Output 1 (OUT 1)	Unclamp Check Output 2 (OUT 2)
OFF	ON	OFF	ON

During Clamp/Unclamp Action

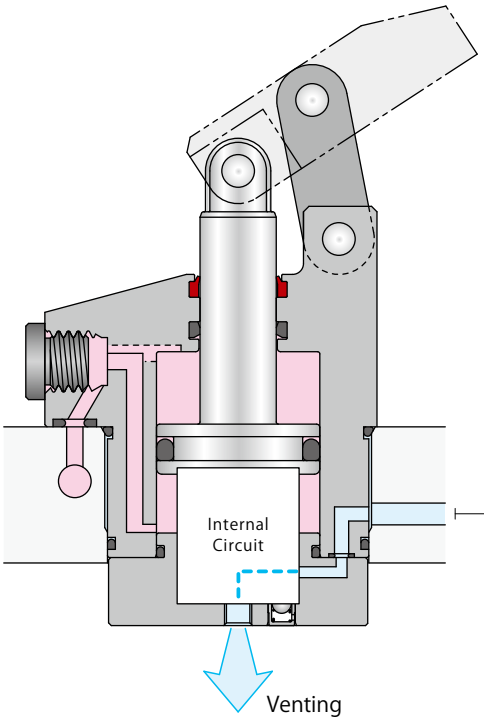

During Clamp/Unclamp Action

The air sensor turns OFF during the stroke with clamping or unclamping pressure supplied.
The detail of sensor ON/OFF range is shown in Air Sensing Chart on Page 26.

Hydraulic Pressure		Air Sensor	
Clamp Side	Unclamp Side	Clamp Check Output 1 (OUT 1)	Unclamp Check Output 2 (OUT 2)
(OFF)	(OFF)	OFF	OFF

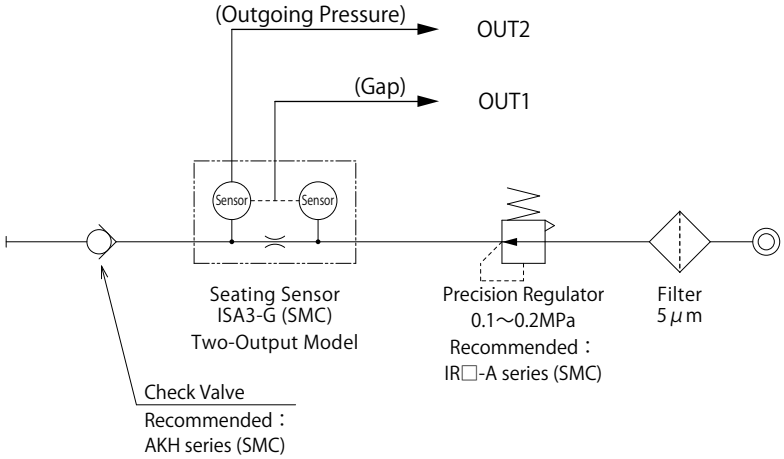

Action Description (Air Sensing Chart Explanation)

Action confirmation can be conducted by detecting differential pressure with the air sensor.

Applicable Model

LKV 040 0 - C [L C R] E - [Blank A H K]

Air Sensor

- Requires **Two-Output Air Sensor** in order to confirm both clamp and unclamp actions with one air sensor.

  Recommended Operating Air Pressure：0.1～0.2MPa (When connected to 4 clamps, air pressure should be 0.15MPa or more.)

  Recommended Air Sensor

Maker	SMC
Name	Digital Seating Switch
Model No.	ISA3-G□A, ISA3-G□B

- **Number of Clamps Connected per Air Sensor：2 ~ 4 pcs.**
  ※Please contact us when using an air sensor for one clamp.
- Please refer to maker's catalog etc. for the detail of the air sensor.
- Continuously supply air pressure when in use.
- Refer to the drawing below for the air circuit construction.

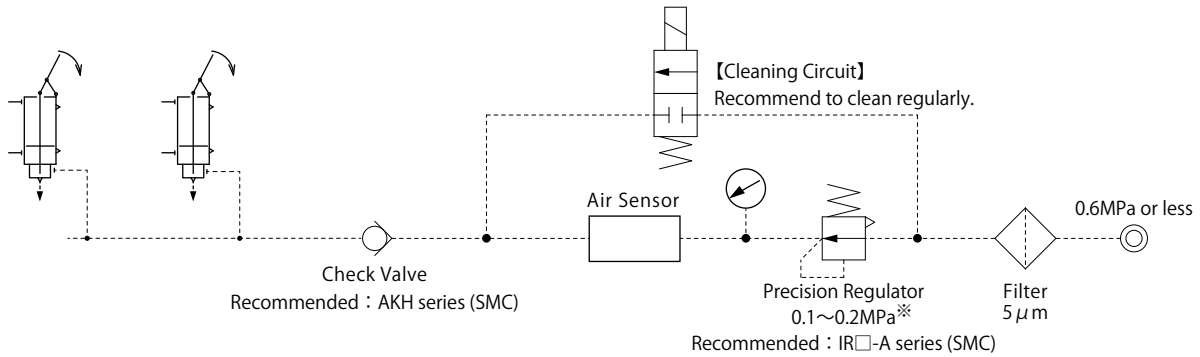

※ When connected to 4 clamps, air pressure should be 0.15MPa or more.

Notes for Design・Installation・Use

- Air vent hole must be open to the atmosphere, and prevent coolant and chips from entering the air vent hole. The air sensor can malfunction if the air vent port is blocked.

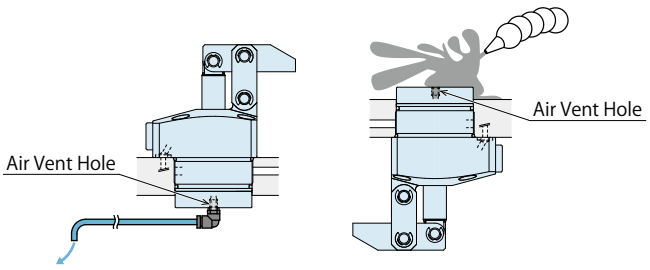

○ The air vent hole is open to the atmosphere.

✕ Coolant and chips enter from the air vent hole.

【Prevention of Foreign Substance to the Air Vent Port】
Coolant and chips can be prevented by setting a check valve with low cracking pressure. (Recommended Check Valve: SMC-made AKH series, cracking pressure: 0.005MPa)

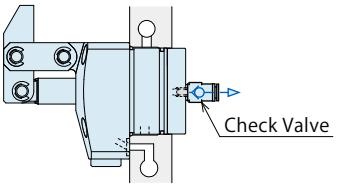

- Continuously supply air pressure to the air port for sensing when in use.
- Set a check valve with low cracking pressure to the detection port of the air sensor. (Recommended Check Valve: SMC-made AKH series, cracking pressure: 0.005MPa)

Air Sensing Chart

When Connected to 3 Clamps, Supply Air Pressure 0.2MPa

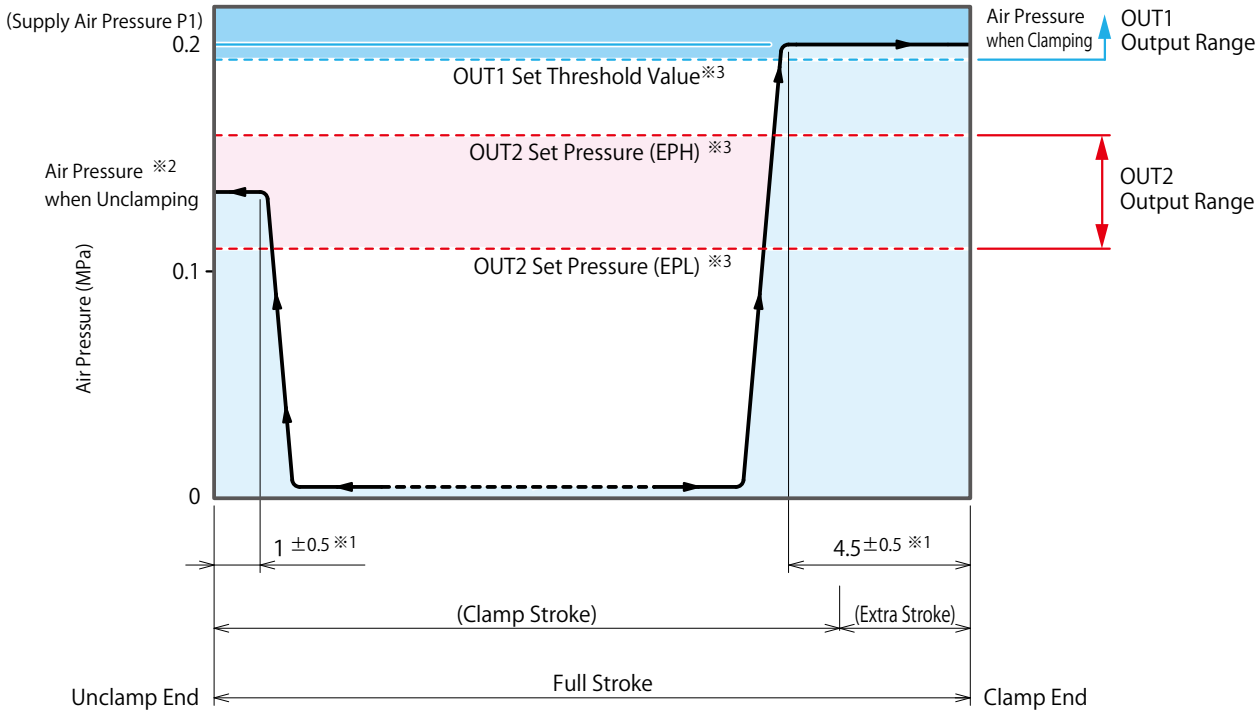

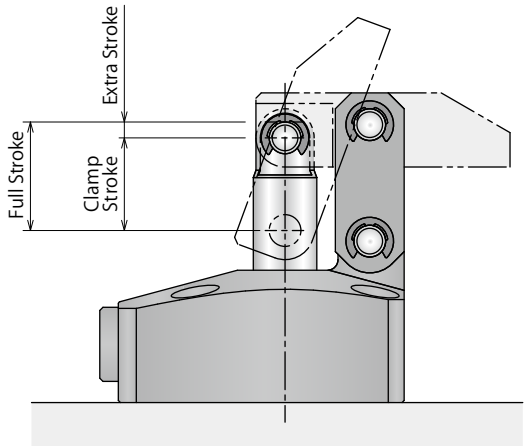

Notes:

1. Sensing chart shows the relationship between the stroke and detection circuit air pressure.
2. The specifications may vary depending on the air circuit. The hose length should be as short as possible. (Suggest less than 5m)
3. Sensor Setting should be as follows: Detect with OUT1 (Threshold Value) for clamp action confirmation, OUT2 (Pressure Set Value) for unclamp action confirmation. Hysteresis for both OUT1 and OUT2 should be set as 0. Make sure to use the recommended air sensor.

※1. There is a certain tolerance with regard to the position where it reaches the pressure when clamping depending on the clamp structure. (Refer to the sensing chart.)

※2. Pressure when unclamping may vary according to the condition of air circuit.

※3. The position where the air sensor turns ON signal output varies depending on the sensor setting. Set according to using systems. Please refer to the maker's instruction manual, etc. for detail of the air sensor.

Model No. Indication

LKV 048 0 - C R E -

1 2 3 4 5

1 Body Size

040 : φD=40mm
048 : φD=48mm
055 : φD=55mm
065 : φD=65mm
075 : φD=75mm

※ Indicates the cylinder outer diameter (φD).

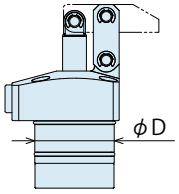

2 Design No.

0 : Revision Number

3 Piping Method

C : Gasket Option (With G Thread Plug)

※ Speed control valve (BZL) is sold separately.
Please refer to P. 55.

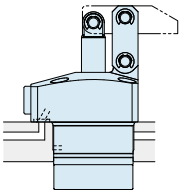

With G Thread Plug
Able to attach speed control valve

4 Lever Direction

L : Left
C : Center
R : Right

※ The images show the lever direction when the piping port is placed in front of you.

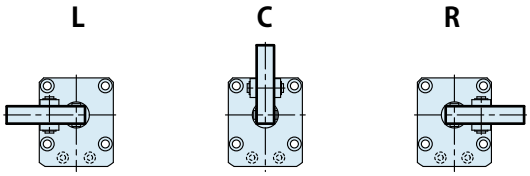

5 Option

Blank : None (Standard)
A : Quick Change Lever Type A
H : High Strength Link Plate (Increase in Allowable Offset)
K : Flange Pin with C Type Circlip

※ Please contact us for a combination of option.

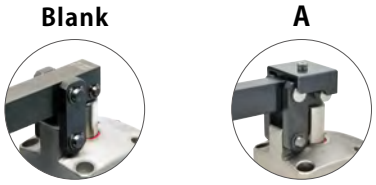

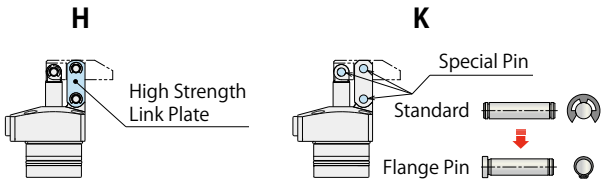

Specifications

Model No.			LKV0400-C□E-□	LKV0480-C□E-□	LKV0550-C□E-□	LKV0650-C□E-□	LKV0750-C□E-□
Cylinder Area for Clamping		cm^2	4.81	6.28	8.84	14.77	22.63
Cylinder Inner Diameter ※1		mm	26	30	35	45	55
Rod Diameter ※1		mm	12	14	16	20	22
Clamping Force (Calculation Formula) ※2		kN	$F=\frac{6.93 \times P}{L-16}$	$F=\frac{10.46 \times P}{L-18.5}$	$F=\frac{16.7 \times P}{L-21}$	$F=\frac{32.58 \times P}{L-24.5}$	$F=\frac{61.1 \times P}{L-30}$
Cylinder Capacity	Clamp	cm^3	9.9	14.8	23	43.6	79.2
	Unclamp	cm^3	8.6	13.0	19.8	37.7	69.8
Full Stroke		mm	20.5	23.5	26	29.5	35
Clamp Stroke		mm	17.5	20.5	23	26.5	32
Extra Stroke		mm	3	3	3	3	3
Hyd. Pressure	Max. Operating Pressure	MPa	7.0				
	Min. Operating Pressure ※3	MPa	1.0				
	Withstanding Pressure	MPa	10.5				
Recommended Operating Air Pressure			0.1 ~ 0.2				
Recommended Air Sensor ※4			Seating Switch ISA3-G (2-Output Model)：SMC				
Operating Temperature		℃	0 ~ 70				
Usable Fluid			General Hydraulic Oil Equivalent to ISO-VG-32				
Mass ※5		kg	0.8	1.2	1.6	2.7	3.8

Notes: ※1. Clamping force cannot be calculated from the cylinder inner diameter and rod diameter.
Please refer to the clamping force calculation formula and the clamping force curve.
※2. F：Clamping Force (kN), P：Supply Hydraulic Pressure (MPa), L：Distance between the piston center and the clamping point (mm).
※3. Minimum pressure to operate the clamp without load.
※4. The number of clamps connected per air sensor is 2 ~ 4 pcs. Please contact us when using an air sensor for one clamp.
※5. Mass of single clamp without the link lever.

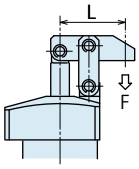

Clamping Force Curve

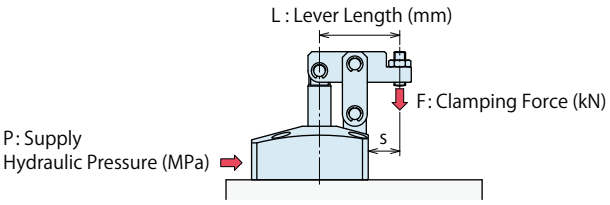

Applicable Model

LKV [ ] 0 - C [L / C / R] E - [Blank / A / H / K]

1 Body Size

(Ex.) When using LKV0480
Supply Hydraulic Pressure 5.0MPa, Lever Length L=42mm
Clamping force is about 2.2kN.

Notes:

1. Tables and graphs shown are the relationships between the clamping force (kN) and supply hydraulic pressure (MPa).
2. Cylinder output (when L=0) cannot be calculated from the calculation formula of clamping force.
3. Using in the non-usable range may damage the clamp and lead to fluid leakage.

※1. F: Clamping Force (kN), P: Supply Hydraulic Pressure (MPa), L: Lever Length (mm)

LKV0400 Clamping Force Calculation Formula ※1 (kN) $F = (6.93 \times P) / (L - 16)$

Hydraulic Pressure (MPa)	Cylinder Force (kN)	Clamping Force (kN) Lever Length L (mm) Non-Usable Range(■)								Min. Lever Length (L) (mm)
		L=25	L=30	L=36.5	L=40	L=50	L=60	L=80	L=100	
7	3.36			2.4	2.0	1.4	1.1	0.8	0.6	32
6.5	3.12		3.2	2.2	1.9	1.3	1.0	0.7	0.5	30
6	2.88		3.0	2.0	1.7	1.2	0.9	0.6	0.5	28
5.5	2.64		2.7	1.9	1.6	1.1	0.9	0.6	0.5	26
5	2.40	3.9	2.5	1.7	1.4	1.0	0.8	0.5	0.4	25
4.5	2.16	3.5	2.2	1.5	1.3	0.9	0.7	0.5	0.4	23
4	1.92	3.1	2.0	1.4	1.2	0.8	0.6	0.4	0.3	23
3.5	1.68	2.7	1.7	1.2	1.0	0.7	0.6	0.4	0.3	23
3	1.44	2.3	1.5	1.0	0.9	0.6	0.5	0.3	0.2	23
2.5	1.20	1.9	1.2	0.8	0.7	0.5	0.4	0.3	0.2	23
2	0.96	1.5	1.0	0.7	0.6	0.4	0.3	0.2	0.2	23
1.5	0.72	1.2	0.7	0.5	0.4	0.3	0.2	0.2	0.1	23
1	0.48	0.8	0.5	0.3	0.3	0.2	0.2	0.1	0.1	23
Max. Operating Pressure (MPa)		5.1	6.5	7.0	7.0	7.0	7.0	7.0	7.0	

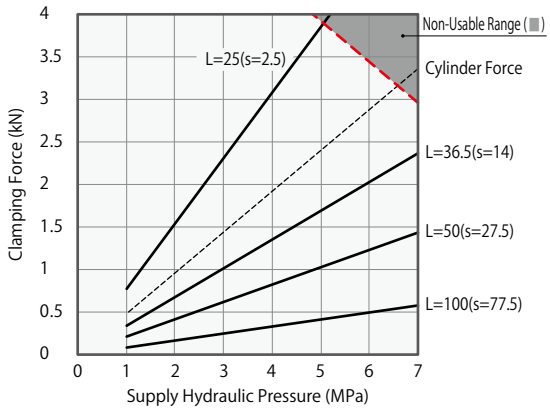

LKV0480 Clamping Force Calculation Formula ※1 (kN) $F = (10.46 \times P) / (L - 18.5)$

Hydraulic Pressure (MPa)	Cylinder Force (kN)	Clamping Force (kN) Lever Length L (mm) Non-Usable Range(■)								Min. Lever Length (L) (mm)
		L=30	L=35	L=42	L=50	L=60	L=80	L=100	L=120	
7	4.40			3.1	2.3	1.8	1.2	0.9	0.7	37
6.5	4.08		4.1	2.9	2.2	1.6	1.1	0.8	0.7	34
6	3.77		3.8	2.7	2.0	1.5	1.0	0.8	0.6	32
5.5	3.46	5.0	3.5	2.4	1.8	1.4	0.9	0.7	0.6	30
5	3.14	4.5	3.2	2.2	1.7	1.3	0.9	0.6	0.5	28
4.5	2.83	4.1	2.9	2.0	1.5	1.1	0.8	0.6	0.5	27
4	2.51	3.6	2.5	1.8	1.3	1.0	0.7	0.5	0.4	26
3.5	2.20	3.2	2.2	1.6	1.2	0.9	0.6	0.4	0.4	26
3	1.88	2.7	1.9	1.3	1.0	0.8	0.5	0.4	0.3	26
2.5	1.57	2.3	1.6	1.1	0.8	0.6	0.4	0.3	0.3	26
2	1.26	1.8	1.3	0.9	0.7	0.5	0.3	0.3	0.2	26
1.5	0.94	1.4	1.0	0.7	0.5	0.4	0.3	0.2	0.2	26
1	0.63	0.9	0.6	0.4	0.3	0.3	0.2	0.1	0.1	26
Max. Operating Pressure (MPa)		5.5	6.7	7.0	7.0	7.0	7.0	7.0	7.0	

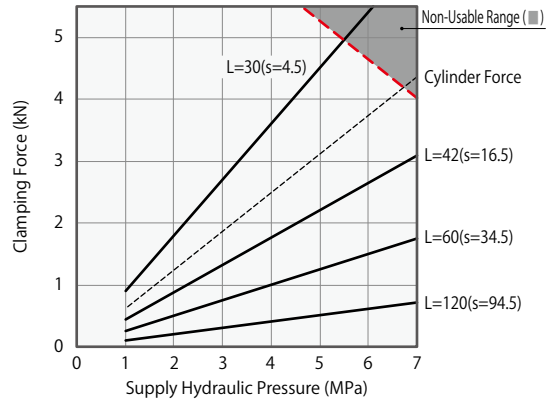

LKV0550 Clamping Force Calculation Formula ※1 (kN) $F = (16.70 \times P) / (L - 21)$

Hydraulic Pressure (MPa)	Cylinder Force (kN)	Clamping Force (kN) Lever Length L (mm) Non-Usable Range(■)								Min. Lever Length (L) (mm)
		L=35	L=40	L=50	L=60	L=70	L=80	L=100	L=120	
7	6.19			4.0	3.0	2.4	2.0	1.5	1.2	45
6.5	5.74			3.7	2.8	2.2	1.8	1.4	1.1	41
6	5.30		5.3	3.5	2.6	2.0	1.7	1.3	1.0	38
5.5	4.86		4.8	3.2	2.4	1.9	1.6	1.2	0.9	36
5	4.42	6.0	4.4	2.9	2.1	1.7	1.4	1.1	0.8	33
4.5	3.98	5.4	4.0	2.6	1.9	1.5	1.3	1.0	0.8	32
4	3.53	4.8	3.5	2.3	1.7	1.4	1.1	0.8	0.7	30
3.5	3.09	4.2	3.1	2.0	1.5	1.2	1.0	0.7	0.6	30
3	2.65	3.6	2.6	1.7	1.3	1.0	0.8	0.6	0.5	30
2.5	2.21	3.0	2.2	1.4	1.1	0.9	0.7	0.5	0.4	30
2	1.77	2.4	1.8	1.2	0.9	0.7	0.6	0.4	0.3	30
1.5	1.33	1.8	1.3	0.9	0.6	0.5	0.4	0.3	0.3	30
1	0.88	1.2	0.9	0.6	0.4	0.3	0.3	0.2	0.2	30
Max. Operating Pressure (MPa)		5.4	6.3	7.0	7.0	7.0	7.0	7.0	7.0	

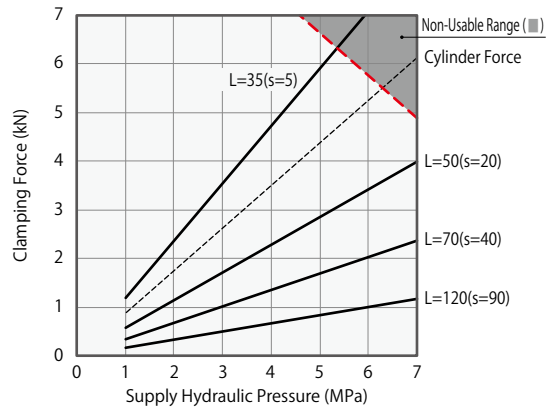

LKV0650

Clamping Force Calculation Formula ※1 (kN) $F = (32.58 \times P) / (L - 24.5)$

Hydraulic Pressure (MPa)	Cylinder Force (kN)	Clamping Force (kN) Lever Length L (mm) L=40	L=50	L=56.5	L=80	L=100	L=120	L=140	L=160	Min. Lever Length (L) (mm)
7	10.34			7.1	4.1	3.0	2.4	2.0	1.7	51
6.5	9.60		8.3	6.6	3.8	2.8	2.2	1.8	1.6	48
6	8.86		7.7	6.1	3.5	2.6	2.0	1.7	1.4	44
5.5	8.13		7.0	5.6	3.2	2.4	1.9	1.6	1.3	41
5	7.39	10.5	6.4	5.1	2.9	2.2	1.7	1.4	1.2	39
4.5	6.65	9.5	5.7	4.6	2.6	1.9	1.5	1.3	1.1	37
4	5.91	8.4	5.1	4.1	2.3	1.7	1.4	1.1	1.0	35
3.5	5.17	7.4	4.5	3.6	2.1	1.5	1.2	1.0	0.8	35
3	4.43	6.3	3.8	3.1	1.8	1.3	1.0	0.8	0.7	35
2.5	3.69	5.3	3.2	2.5	1.5	1.1	0.9	0.7	0.6	35
2	2.95	4.2	2.6	2.0	1.2	0.9	0.7	0.6	0.5	35
1.5	2.22	3.2	1.9	1.5	0.9	0.6	0.5	0.4	0.4	35
1	1.48	2.1	1.3	1.0	0.6	0.4	0.3	0.3	0.2	35
Max. Operating Pressure (MPa)		5.3	6.8	7.0	7.0	7.0	7.0	7.0	7.0	

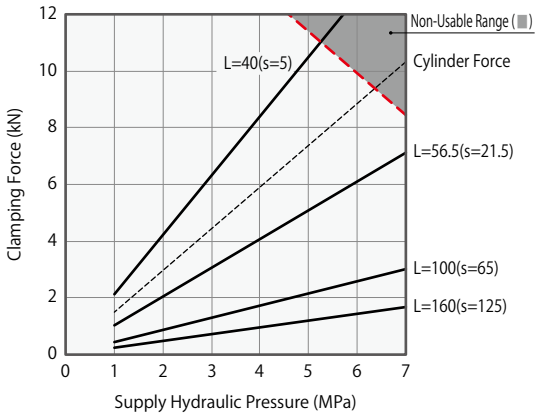

LKV0750

Clamping Force Calculation Formula ※1 (kN) $F = (61.1 \times P) / (L - 30)$

Hydraulic Pressure (MPa)	Cylinder Force (kN)	Clamping Force (kN) Lever Length L (mm) L=50	L=60	L=67.5	L=80	L=100	L=120	L=140	L=160	Min. Lever Length (L) (mm)
7	15.84			11.4	8.6	6.1	4.8	3.9	3.3	63
6.5	14.71		13.2	10.6	7.9	5.7	4.4	3.6	3.1	59
6	13.58		12.2	9.8	7.3	5.2	4.1	3.3	2.8	54
5.5	12.45		11.2	9.0	6.7	4.8	3.7	3.1	2.6	51
5	11.31	15.3	10.2	8.1	6.1	4.4	3.4	2.8	2.4	48
4.5	10.18	13.7	9.2	7.3	5.5	3.9	3.1	2.5	2.1	45
4	9.05	12.2	8.1	6.5	4.9	3.5	2.7	2.2	1.9	43
3.5	7.92	10.7	7.1	5.7	4.3	3.1	2.4	1.9	1.6	43
3	6.79	9.2	6.1	4.9	3.7	2.6	2.0	1.7	1.4	43
2.5	5.66	7.6	5.1	4.1	3.1	2.2	1.7	1.4	1.2	43
2	4.53	6.1	4.1	3.3	2.4	1.7	1.4	1.1	0.9	43
1.5	3.39	4.6	3.1	2.4	1.8	1.3	1.0	0.8	0.7	43
1	2.26	3.1	2.0	1.6	1.2	0.9	0.7	0.6	0.5	43
Max. Operating Pressure (MPa)		5.4	6.7	7.0	7.0	7.0	7.0	7.0	7.0	

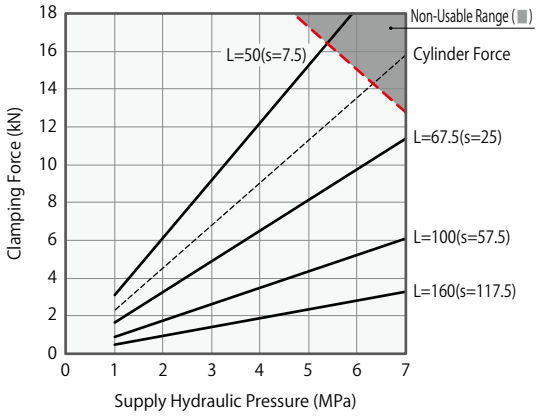

Allowable Offset Graph (Option・・・Blank: Standard)

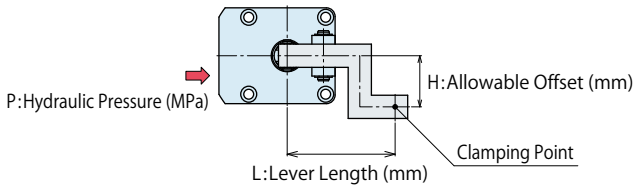

(Ex.) When using LKV0480-C□E-□
Supply Hydraulic Pressure 5.0MPa, Lever Length L=80mm
Allowable Offset is about 10mm.

Applicable Model

LKV □ 0 - C L/C/R E - Blank/A/K

1 Body Size

5 Option
When Blank (or A / K) is chosen.

Notes:
1. Tables and graphs shown are the relationships between the lever length (mm) for supply hydraulic pressure (MPa) and the allowable offset (mm).
2. Using the lever beyond allowable offset may cause deformation, galling and fluid leakage etc.
3. The tables and graphs are only for reference. The design should be carried out with allowance fully taken into consideration.

LKV0400-C□E-□

Hydraulic Pressure (MPa)	Allowable Offset H (mm) Lever Length L (mm) Non-Usable Range (■)							
	L=25	L=30	L=36.5	L=40	L=50	L=60	L=80	L=100
7				3	4	5	8	10
6.5			3	3	5	6	9	12
6			3	4	5	7	10	14
5.5		3	4	5	6	8	12	16
5		3	5	5	8	10	14	19
4.5		4	5	6	9	12	17	22
4	3	4	6	7	11	14	20	26
3.5	3	5	8	9	13	17	24	32
3	4	6	9	11	16	20	30	39
2.5	5	8	12	14	20	26	37	49
2	7	11	16	18	26	34	49	64
1.5	10	15	22	26	36	47	68	89
1	15	23	34	40	57	73	106	140

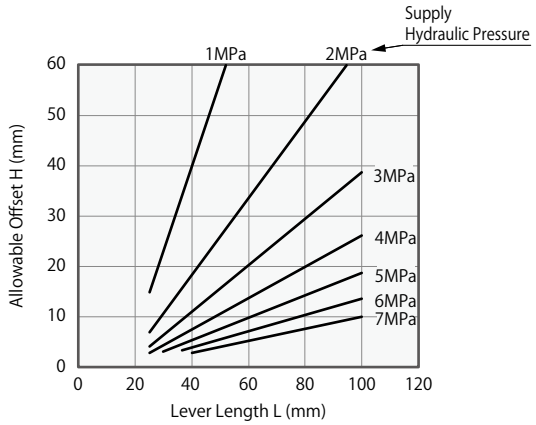

LKV0480-C□E-□

Hydraulic Pressure (MPa)	Allowable Offset H (mm) Lever Length L (mm) Non-Usable Range (■)							
	L=30	L=35	L=42	L=50	L=60	L=80	L=100	L=120
7				3	4	6	7	9
6.5			2	3	4	6	9	11
6			3	4	5	8	10	12
5.5		2	3	5	6	9	12	15
5		3	4	5	7	10	14	17
4.5		3	5	6	8	12	16	20
4	3	4	6	7	10	15	19	24
3.5	3	5	7	9	12	18	23	29
3	4	6	8	11	15	22	29	36
2.5	5	7	10	14	18	27	36	45
2	7	10	14	18	24	36	47	59
1.5	9	13	19	25	33	50	66	82
1	14	21	30	40	52	77	103	128

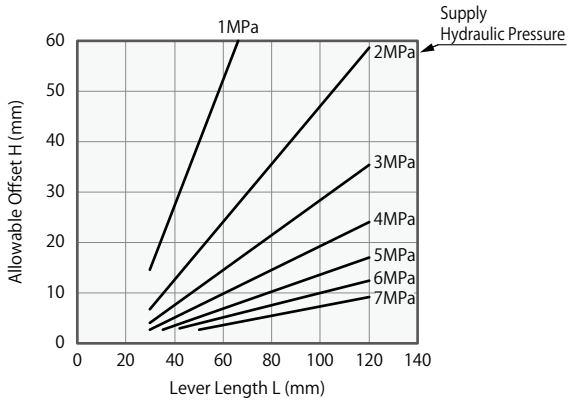

LKV0550-C□E-□

Hydraulic Pressure (MPa)	Allowable Offset H (mm) Lever Length L (mm) Non-Usable Range (■)							
	L=35	L=40	L=50	L=60	L=70	L=80	L=100	L=120
7				5	6	7	9	12
6.5			4	5	7	8	11	14
6			5	6	8	10	13	16
5.5			5	7	9	11	15	19
5		4	6	9	11	13	17	22
4.5		5	8	10	13	15	21	26
4	4	6	9	12	15	18	25	31
3.5	5	7	11	15	18	22	30	37
3	6	9	13	18	23	27	36	46
2.5	8	11	17	23	28	34	46	57
2	11	14	22	30	37	45	60	75
1.5	15	20	31	41	52	62	84	105
1	23	31	48	65	81	98	131	164

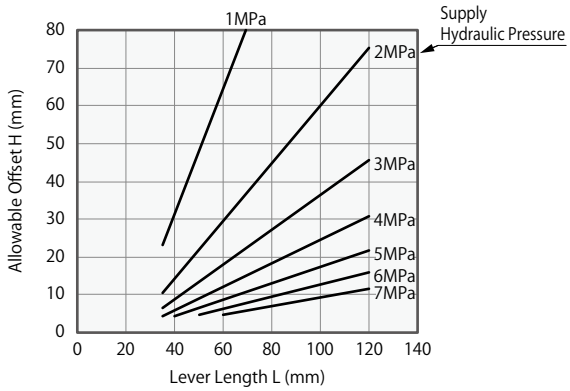

LKV0650-C□E-□

Hydraulic Pressure (MPa)	Allowable Offset H (mm) Non-Usable Range (■) Lever Length L (mm)							
	L=40	L=50	L=56.5	L=80	L=100	L=120	L=140	L=160
7	■	■	■	5	7	9	11	13
6.5	■	■	4	6	9	11	13	15
6	■	■	4	7	10	13	15	18
5.5	■	4	5	9	12	15	18	21
5	■	5	6	10	14	17	21	25
4.5	3	5	7	12	16	20	25	29
4	4	7	8	14	19	24	30	35
3.5	5	8	10	17	23	29	36	42
3	6	10	12	21	29	36	44	51
2.5	7	12	15	26	36	46	55	65
2	10	16	20	35	47	60	72	85
1.5	13	22	28	48	66	83	101	118
1	21	35	44	76	103	130	157	185

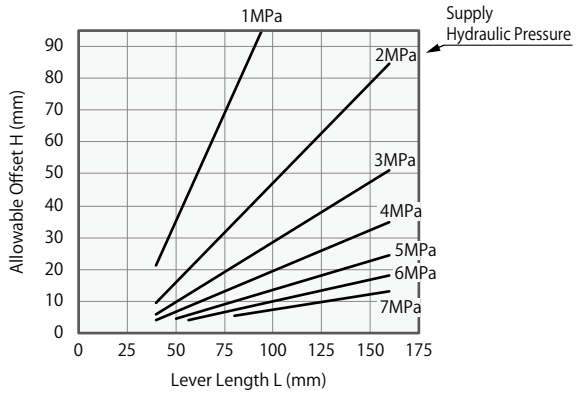

LKV0750-C□E-□

Hydraulic Pressure (MPa)	Allowable Offset H (mm) Non-Usable Range (■) Lever Length L (mm)							
	L=50	L=60	L=67.5	L=80	L=100	L=120	L=140	L=160
7	■	■	■	5	7	9	11	13
6.5	■	■	5	6	8	11	13	16
6	■	4	5	7	10	13	15	18
5.5	■	5	6	8	11	15	18	21
5	4	6	7	10	13	17	21	25
4.5	5	7	9	11	16	20	25	30
4	5	8	10	14	19	24	30	35
3.5	7	10	12	16	23	29	36	42
3	8	12	15	20	28	36	44	52
2.5	10	15	19	25	35	45	56	66
2	13	20	25	33	46	60	73	86
1.5	18	28	35	46	65	83	101	120
1	29	43	54	72	101	130	159	188

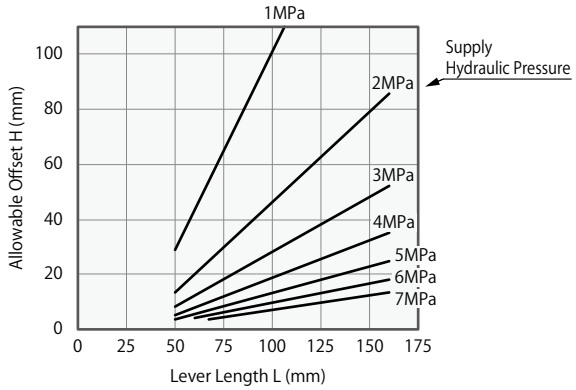

Allowable Offset Graph (Option・・・H：High Strength Link Plate)

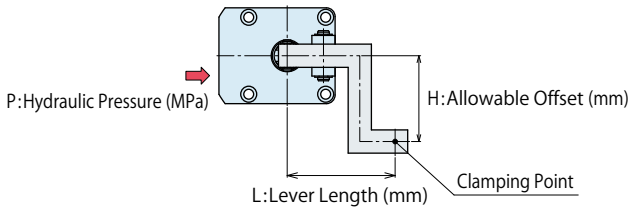

(Ex.) When using LKV0480-C□E-H
Supply Hydraulic Pressure 5.0MPa, Lever Length L=80mm
Allowable Offset is about 46mm.

Applicable Model

LKV [ ] 0 - C [L/C/R] E - [H]

1 Body Size

5 Option：When H is chosen.

Notes:
1. Tables and graphs shown are the relationships between the lever length (mm) for supply hydraulic pressure (MPa) and the allowable offset (mm).
2. Using the lever beyond allowable offset may cause deformation, galling and fluid leakage etc.
3. The tables and graphs are only for reference. The design should be carried out with allowance fully taken into consideration.

LKV0400-C□E-H

Hydraulic Pressure (MPa)	Allowable Offset H (mm) Non-Usable Range (■) Lever Length L (mm)							
	L=25	L=30	L=36.5	L=40	L=50	L=60	L=80	L=100
7				17	24	31	46	60
6.5			16	18	26	34	49	64
6			17	20	28	37	53	70
5.5		13	19	22	31	40	58	76
5		14	20	24	34	44	64	84
4.5		16	23	27	38	49	71	93
4	11	17	26	30	42	55	80	105
3.5	13	20	29	34	48	63	91	120
3	15	23	34	40	57	73	106	140
2.5	18	28	41	48	68	88	128	168
2	22	35	51	60	85	110	160	210
1.5	30	47	68	80	113	146	213	279
1	45	70	102	120	170	220	319	419

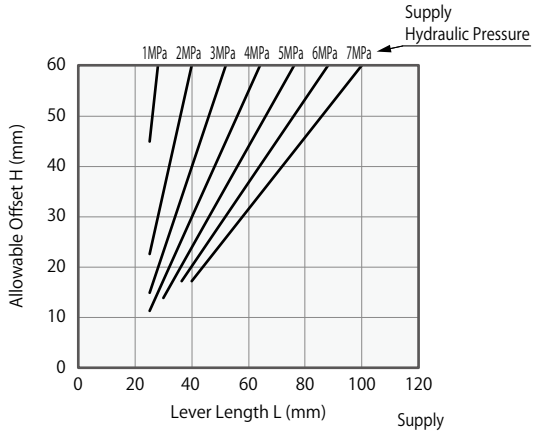

LKV0480-C□E-H

Hydraulic Pressure (MPa)	Allowable Offset H (mm) Non-Usable Range (■) Lever Length L (mm)							
	L=30	L=35	L=42	L=50	L=60	L=80	L=100	L=120
7				17	22	33	44	55
6.5			14	18	24	36	47	59
6			15	20	26	39	51	64
5.5		11	16	22	29	42	56	70
5		12	18	24	31	46	62	77
4.5		14	20	26	35	52	68	85
4	11	16	22	30	39	58	77	96
3.5	12	18	25	34	45	66	88	110
3	14	21	30	40	52	77	103	128
2.5	17	25	36	48	63	93	123	153
2	22	31	44	60	78	116	154	192
1.5	29	42	59	79	105	155	205	256
1	43	62	89	119	157	232	308	384

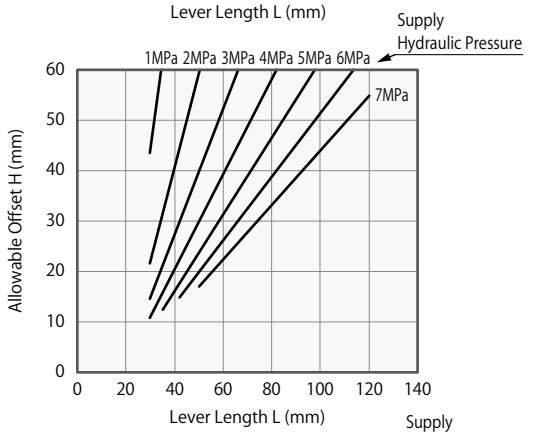

LKV0550-C□E-H

Hydraulic Pressure (MPa)	Allowable Offset H (mm) Non-Usable Range (■) Lever Length L (mm)							
	L=35	L=40	L=50	L=60	L=70	L=80	L=100	L=120
7				28	35	42	56	70
6.5			22	30	37	45	60	76
6			24	32	41	49	65	82
5.5			26	35	44	53	71	89
5		19	29	39	49	59	79	98
4.5		21	32	43	54	65	87	109
4	17	24	36	48	61	73	98	123
3.5	20	27	41	55	70	84	112	141
3	23	31	48	65	81	98	131	164
2.5	28	38	58	78	97	117	157	197
2	35	47	72	97	122	147	196	246
1.5	46	63	96	129	162	196	262	328
1	70	94	144	194	244	293	393	492

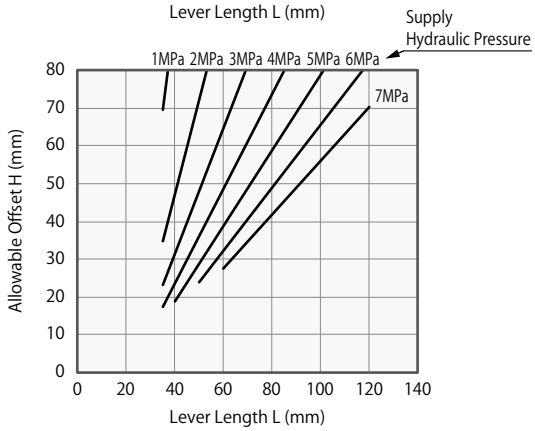

LKV0650-C□E-H

Hydraulic Pressure (MPa)	Allowable Offset H (mm) Non-Usable Range (■) Lever Length L (mm)							
	L=40	L=50	L=56.5	L=80	L=100	L=120	L=140	L=160
7	■	■	■	32	44	56	67	79
6.5	■	■	20	35	47	60	73	85
6	■	■	22	38	51	65	79	92
5.5	■	19	24	41	56	71	86	101
5	■	21	26	45	62	78	94	111
4.5	14	23	29	50	69	87	105	123
4	16	26	33	57	77	98	118	139
3.5	18	30	37	65	88	112	135	158
3	21	35	44	76	103	130	157	185
2.5	25	42	52	91	123	156	189	222
2	32	52	65	113	154	195	236	277
1.5	42	70	87	151	206	260	315	369
1	63	104	131	227	309	390	472	554

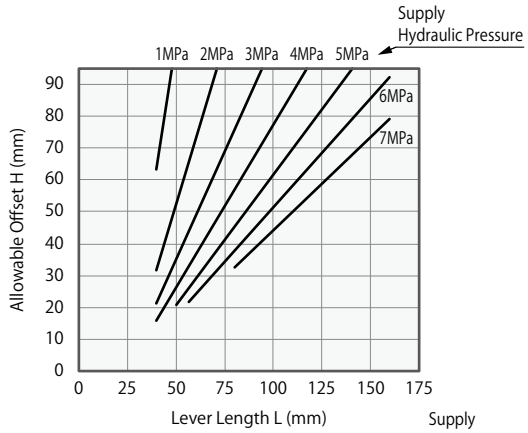

LKV0750-C□E-H

Hydraulic Pressure (MPa)	Allowable Offset H (mm) Non-Usable Range (■) Lever Length L (mm)							
	L=50	L=60	L=67.5	L=80	L=100	L=120	L=140	L=160
7	■	■	■	31	43	56	68	80
6.5	■	■	25	33	47	60	73	87
6	■	22	27	36	51	65	79	94
5.5	■	24	30	39	55	71	87	102
5	17	26	32	43	61	78	95	113
4.5	19	29	36	48	67	87	106	125
4	22	32	41	54	76	97	119	141
3.5	25	37	46	62	87	111	136	161
3	29	43	54	72	101	130	159	188
2.5	35	52	65	87	121	156	190	225
2	43	65	81	108	152	195	238	281
1.5	58	87	108	144	202	260	317	375
1	87	130	162	216	303	390	476	563

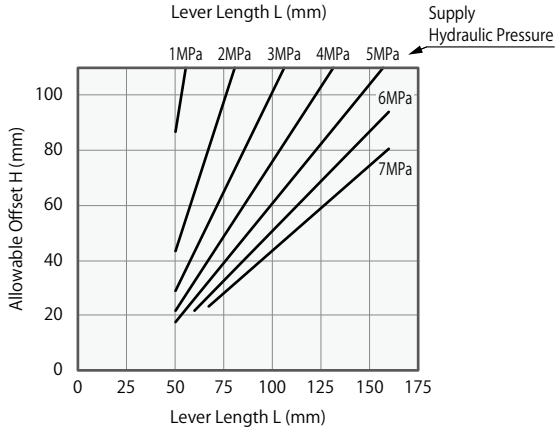

External Dimensions

※The drawing shows the clamped state of LKV-CCE.

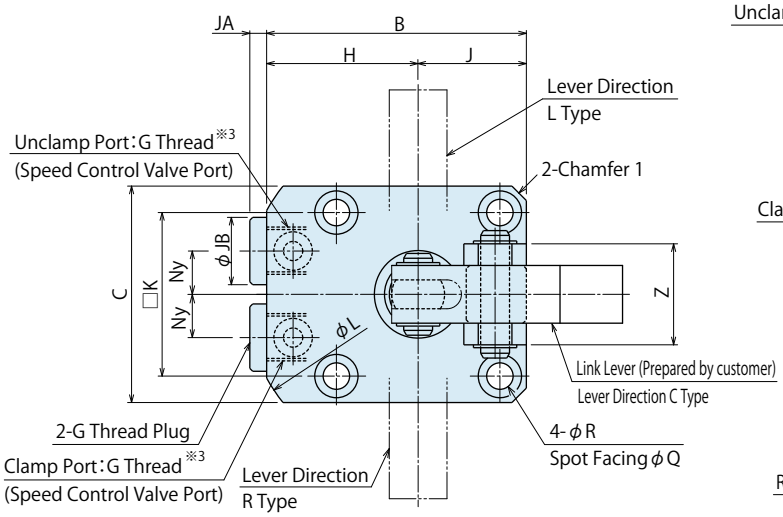

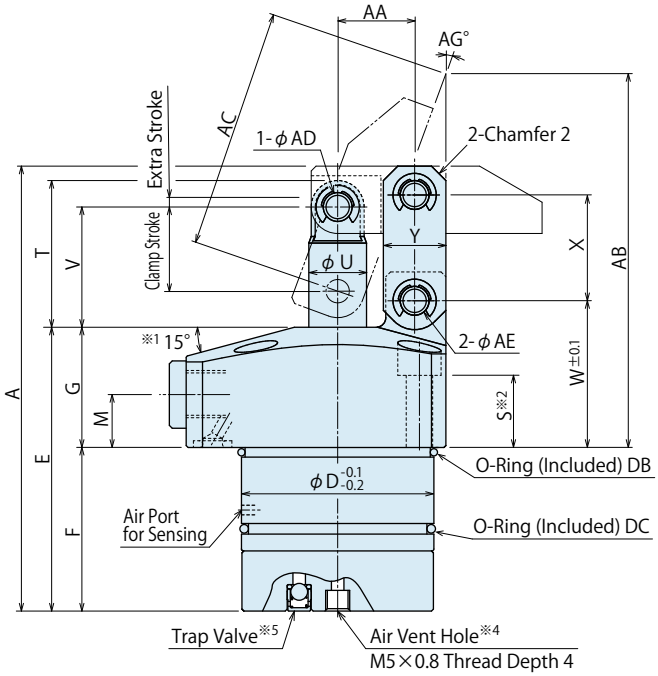

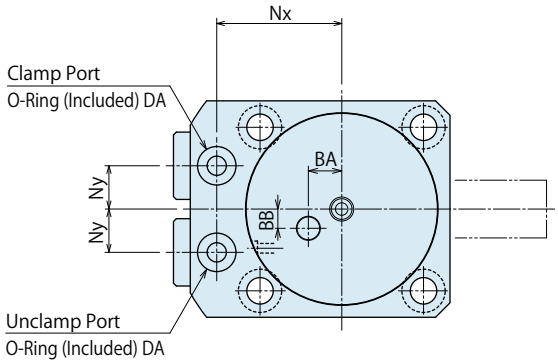

Machining Dimensions of Mounting Area

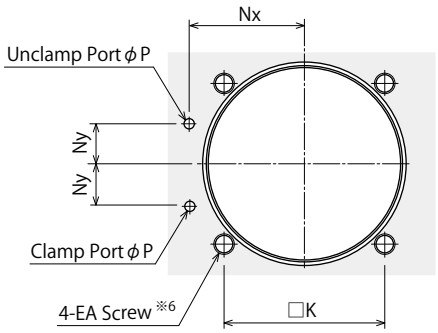

For Blind Hole

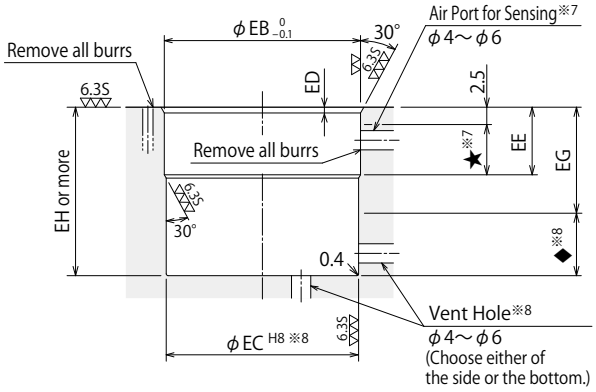

For Through Hole

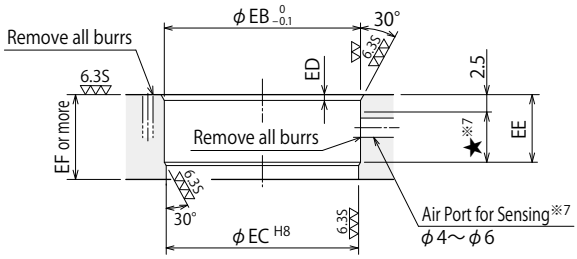

Notes:

※6. EA tapping depth of the mounting bolt should be decided according to the mounting height referring to dimensions 'S'.

※7. Prepare the air port for sensing within the ★ area.

※8. Prepare the vent hole on the side or the bottom.
When preparing on the side, it should be within the ◆ area.
When preparing on the bottom, it should be within φEC.

Notes:

※ 1. Flange inclination angle is 12° only for LKV0650.

※ 2. Mounting bolts are not provided with the product.
Please prepare them according to the mounting height referring to dimension 'S'.

※ 3. Speed control valve is sold separately. Please refer to P.55 for detail.

※ 4. Air vent hole must be open to the atmosphere, and prevent coolant and chips from entering the air vent hole. If exposed to coolant, use M5 screw and prepare piping to prevent coolant and chips, but do not block the air vent hole.

※ 5. Do not block the trap valve, and it must be open to the atmosphere.

1. Please use the provided pin (equivalent to φADf6, φAEf6, HRC60) as mounting pin for lever.

Model No. Indication

LKV 048 0 – C L C R E Blank -H -K

1 2 3 4 5

(Format Ex.：LKV0480-CCE, LKV0550-CLE-H)

1 Body Size
2 Design No.
3 Piping Method
4 Lever Direction
5 Option (When selecting: Blank / H / K)

Notes:
1. For option -H, the material of link plate has higher intensity than that of standard plate, and the form of chamfering 2 is round.
2. For option -K, flange pin is used as link pin (3 parts) and C type circlip is used as stop ring.

External Dimensions and Machining Dimensions of Mounting

(mm)

Model No.		LKV0400-C□E-□	LKV0480-C□E-□	LKV0550-C□E-□	LKV0650-C□E-□	LKV0750-C□E-□
Full Stroke		20.5	23.5	26	29.5	35
Clamp Stroke		17.5	20.5	23	26.5	32
Extra Stroke		3	3	3	3	3
A		92.5	103.5	110.5	124.5	145.5
B		54	61	69	81	94.5
C		45	51	60	70	85
D		40	48	55	65	75
E		59	64.5	65	70.5	78.5
F		34	36.5	37	40.5	41.5
G		25	28	28	30	37
H		31.5	35.5	39	46	52
J		22.5	25.5	30	35	42.5
K		34	40	47	55	63
L		72	81	88	106	116
M		11	12	12	13	16
Nx		26	30	33.5	39.5	45
Ny		9	11	12	15	16
P		3	3	3	5	5
Q		9	9	11	11	14
R		5.5	5.5	6.8	6.8	9
S		15	16	13.5	16	17.5
T		30.5	35	37.5	45	55
U		12	14	16	20	22
V		25	29	31.5	37	45
W		30.5	34.5	35.5	39	48
X		22	26	30	35.5	43.5
Y		13	13	16	19	25
Z		21	24	28	37	40
Chamfer 1		C3	C3	C3	C4	C10
Chamfer 2		C3	C3	C3	C5	C5
AA		16	18.5	21	24.5	30
AB		77.7	92.4	101.9	111.4	130.8
AC		50.2	61.2	71.7	78.7	90.8
AD		6	6	6	8	10
AE		6	6	8	10	12
AG		20.2	18.9	19.9	20.5	21.4
BA		6.9	6.9	6.9	6.9	9.2
BB		4	4	4	4	3.8
EA (Nominal×Pitch)		M5×0.8	M5×0.8	M6×1	M6×1	M8×1.25
EB		40.8	49	56	66	76
EC		$40^{+0.039}_{0}$	$48^{+0.039}_{0}$	$55^{+0.046}_{0}$	$65^{+0.046}_{0}$	$75^{+0.046}_{0}$
ED		1.2	1.2	1.5	1.5	1.5
EE		14	18.5	18.5	24	24
EF		20	25	25	30	30
EG		21.5	25	25.5	31	32.5
EH		34.5	37	37.5	41	42
JA		3.5	3.5	3.5	4.5	4.5
JB		14	14	14	19	19
Clamp Port : G Thread Unclamp Port : G Thread		G1/8	G1/8	G1/8	G1/4	G1/4
O-Ring	DA	1BP5	1BP5	1BP5	1BP7	1BP7
	DB	38×1.5 (Internal Diam.× Wire Diam.)	AS568-031 (70°)	AS568-034 (70°)	AS568-037 (70°)	AS568-040 (70°)
	DC	AS568-028 (70°)	AS568-031 (70°)	AS568-033 (70°)	AS568-036 (70°)	AS568-039 (70°)

External Dimensions

※The drawing shows the clamped state of LKV-CCE-A.

This drawing shows the dimensions of -A：Quick Change Lever part only.
Please refer to P.35 for unlisted dimensions: clamp body dimensions and mounting part machining dimensions.

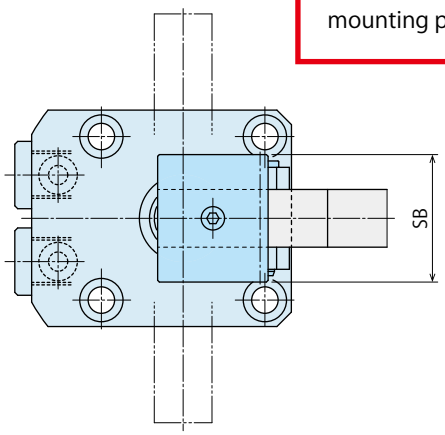

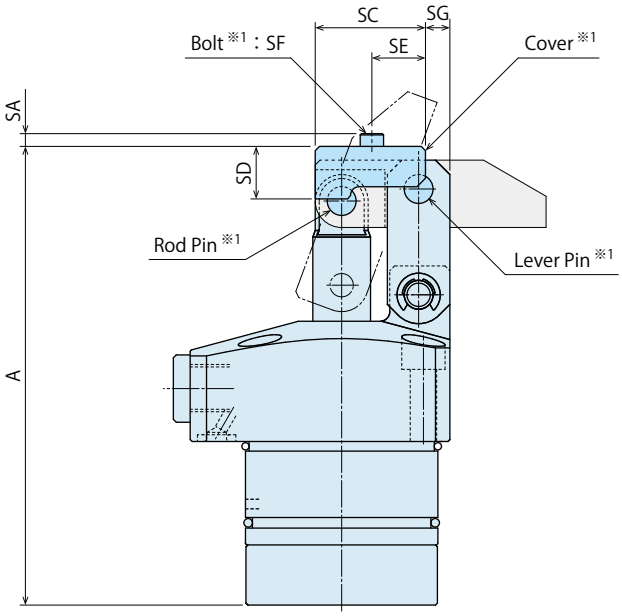

Note :

※1. Tightening Kit (LZK□-W) including the cover (with bolt), rod pin and lever pin is sold separately.

Model No. Indication

LKV 048 0 – C LCR E – A

(Format Ex. : LKV0480-CCE-A, LKV0550-CLE-A)

1 Body Size
2 Design No.
3 Piping Method
4 Lever Direction
5 Option (When selecting: A)

Note :
1. When selecting 5 Option **A**, unlike **Blank/H/K**, the lever mounting pin is not included.
The dimensions of clamp main body are the same as **Blank/H/K**.

External Dimensions and Machining Dimensions of Mounting

(mm)

Model No.	LKV0400-C□E-A	LKV0480-C□E-A	LKV0550-C□E-A	LKV0650-C□E-A	LKV0750-C□E-A
Full Stroke	20.5	23.5	26	29.5	35
Clamp Stroke	17.5	20.5	23	26.5	32
Extra Stroke	3	3	3	3	3
A	95.5	106.5	113.5	128.5	149.5
SA	3	3	3	4	4
SB	26	30	35	45	50
SC	24	26	29	34.5	43
SD	11.5	13	17	20	25
SE	12.5	13	16.5	18.5	23
SF	M3×0.5×6	M3×0.5×6	M3×0.5×8	M4×0.7×8	M4×0.7×10
SG	4	5.5	7	8.5	9.5

Link Lever Design Dimensions

※ Reference for designing link lever.

Applicable Model No.

LKV [ ] 0 - C [L/C/R] E - [Blank/A/H/K]

1 Body Size

5 Option

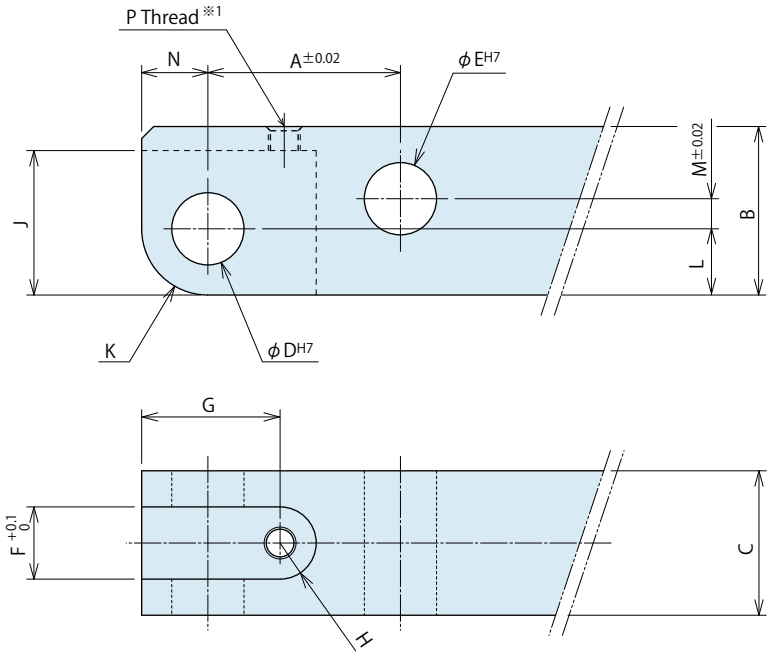

Link Lever Design Dimension List

(mm)

Corresponding Model No.	LKV0400	LKV0480	LKV0550	LKV0650	LKV0750
A	16	18.5	21	24.5	30
B	14	16	20	25	32
C	$12^{0}_{-0.2}$	$12^{0}_{-0.3}$	$16^{0}_{-0.3}$	$19^{0}_{-0.3}$	$22^{0}_{-0.3}$
D	$6^{+0.012}_{0}$	$6^{+0.012}_{0}$	$6^{+0.012}_{0}$	$8^{+0.012}_{0}$	$10^{+0.015}_{0}$
E	$6^{+0.012}_{0}$	$6^{+0.012}_{0}$	$8^{+0.012}_{0}$	$10^{+0.015}_{0}$	$12^{+0.015}_{0}$
F	6	6	8	10	11
G	11.5	13	12.5	16	20
H	R3	R3	R4	R5	R5.5
J	12	13	13	17.5	22
K	R5.5	R6	R6	R8	R10
L	5.5	6	6	8	10
M	2.5	3.5	6	7.5	9.5
N	5.5	6	6	8	10
P (Nominal×Depth) ※1	M3×0.5 Through Hole	M3×0.5 Through Hole	M3×0.5×6	M4×0.7 Through Hole	M4×0.7×7

Notes:

1. Please design the link lever length according to the performance curve.
2. If the link lever is not in accordance with the dimension shown above, performance may be degraded and damage can occur.
3. For Clamp Body 5 **Blank/H/K**, please use the attached pin (equivalent to φADf6, φAEf6, HRC60) as the mounting pin for lever. (Please refer to each external dimension of LKV for the dimensions φAD and φAE.)
4. For Clamp Body 5 **A,** the mounting pin for lever is not provided with the product. Please order the Setup Kit for the Quick Changer Lever Type A (LZK□-W).

※1. Machining for P Thread is only required when using the Setup Kit for the Quick Changer Lever Type A (LZK□-W).

Accessory：Material Link Lever

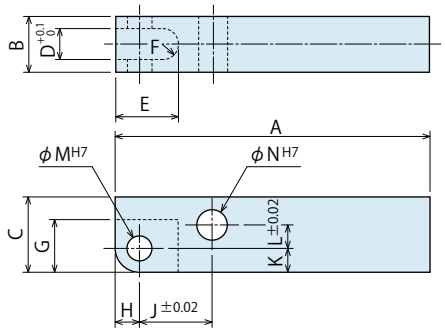

Model No. Indication

LZK 048 0 – L

- 048: Size (Refer to the table)
- 0: Design No. (Revision Number)

(mm)

Model No.	LZK0400-L	LZK0480-L	LZK0550-L	LZK0650-L	LZK0750-L
Corresponding Model No.	LKV0400	LKV0480	LKV0550	LKV0650	LKV0750
A	75	85	90	105	110
B	$12^{0}_{-0.2}$	$12^{0}_{-0.3}$	$16^{0}_{-0.3}$	$19^{0}_{-0.3}$	$22^{0}_{-0.3}$
C	14	16	20	25	32
D	6	6	8	10	11
E	14.5	16	16.5	21	25.5
F	R3	R3	R4	R5	R5.5
G	12	13	13	17.5	22
H	5.5	6	6	8	10
J	16	18.5	21	24.5	30
K	5.5	6	6	8	10
L	2.5	3.5	6	7.5	9.5
M	$6^{+0.012}_{0}$	$6^{+0.012}_{0}$	$6^{+0.012}_{0}$	$8^{+0.015}_{0}$	$10^{+0.015}_{0}$
N	$6^{+0.012}_{0}$	$6^{+0.012}_{0}$	$8^{+0.015}_{0}$	$10^{+0.015}_{0}$	$12^{+0.018}_{0}$

Notes：

1. Material : S45C　Surface Finishing：Alkaline Blackening
2. If necessary, the front end should be additionally machined.
3. For Clamp Body 5 **Blank/H/K**, please use the attached pin (equivalent to φADf6, φAEf6, HRC60) as the mounting pin for lever.
4. For Clamp Body 5 **A,** the mounting pin for lever is not provided with the product.
   Please order the Setup Kit for the Quick Changer Lever Type A (LZK□-W).
5. When using Tightening Kit for Quick Change Lever Type A (LZK□-W), a tapped hole should be additionally machined.
   Refer to the link lever design dimensions (P Thread part) for additional machining.

Accessory：Setup Kit for Quick Change Lever Type A

Model No. Indication

LZK 040 0 – W

- 040: Size (Refer to the table.)
- 0: Design No. (Revision Number)

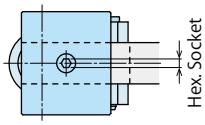

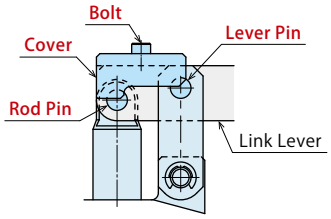

Setup Kit for mounting Quick Change Lever Type A.
Sold separately from clamp body.

【Contents of Setup Kit】
・Cover (with Bolt)　・Rod Pin　・Lever Pin

Model No.	LZK0400-W	LZK0480-W	LZK0550-W	LZK0650-W	LZK0750-W
Corresponding Model No.	LKV0400-□-A	LKV0480-□-A	LKV0550-□-A	LKV0650-□-A	LKV0750-□-A
Nominal×Pitch of Bolt	M3×0.5	M3×0.5	M3×0.5	M4×0.7	M4×0.7
Hex. Socket　mm	2.5	2.5	2.5	3	3
Tightening Torque　N•m	1.3	1.3	1.3	3.2	3.2

Cautions

Notes for Design

1) Check Specifications

- Please use each product according to the specifications.

2) Notes for Circuit Design

- Please read "Notes on Hydraulic Cylinder Speed Control Unit" to assist with proper hydraulic circuit designing. Improper circuit design may lead to malfunctions and damages. (Refer to P.60)
- Ensure there is no possibility of supplying hydraulic pressure to the clamp and unclamp ports simultaneously.

3) Notes for Link Lever Design

- Make sure no force is applied to the piston rod except from the axial direction. The usage like the one shown in the drawing below will apply a large bending stress to the piston rod and must be avoided.

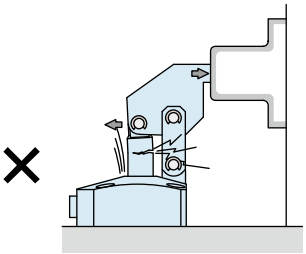

- If offset load is applied on the link part, use it within the allowable range of "Allowable Offset Graph".

4) When using on a welding fixture, the exposed area of piston rod and link plate should be protected.

- If spatter gets onto the sliding surface it could lead to malfunction and fluid leakage.

5) When clamping on a sloped surface of the workpiece

- Make sure the clamp surface and mounting surface of the clamp are parallel.

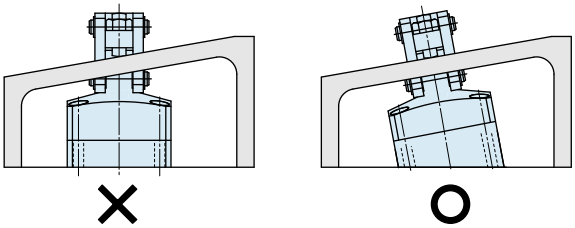

6) When using in a dry environment.

- The link pin can dry out. Grease it periodically or use a special pin. Contact us for the specifications for special pins.

7) Vent Hole and Check Valve of Air Sensor

- Make sure to check the notes for design, installation and use on P. 25. when using an air sensor.

Installation Notes

1) Check the fluid to use.

- Please use the appropriate fluid by referring to the Hydraulic Fluid List (P.59).

2) Installation of the Product

- When mounting the clamp, use hexagon socket bolts as multiple bolt holes for mounting (with tensile strength of 12.9) and tighten them with the torque shown in the chart below. Tightening with greater torque than recommended can depress the seating surface or break the bolt.

Model No.	Thread Size	Tightening Torque (N·m)
LKV0400-C□E	M5×0.8	8.0
LKV0480-C□E	M5×0.8	8.0
LKV0550-C□E	M6×1	14
LKV0650-C□E	M6×1	14
LKV0750-C□E	M8×1.25	33

3) Installation / Removal of the Link Lever

- When inserting the link pin, do not hit the pin directly with a hammer. When using a hammer to insert the pin, always use a cover plate with a smaller diameter than the snap ring groove on the pin.

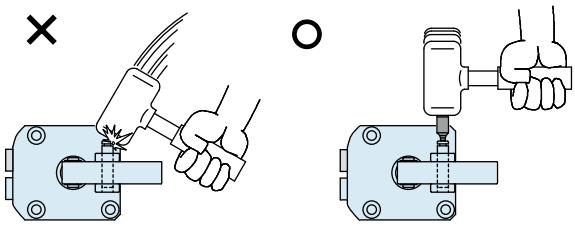

- Tighten the bolt for Quick Change Lever Type A with the torque shown below.

Quick Change Lever Type A

Model No.	Bolt Size	Tightening Torque (N·m)
LKV0400-C□E-A	M3×0.5	1.3
LKV0480-C□E-A	M3×0.5	1.3
LKV0550-C□E-A	M3×0.5	1.3
LKV0650-C□E-A	M4×0.7	3.2
LKV0750-C□E-A	M4×0.7	3.2

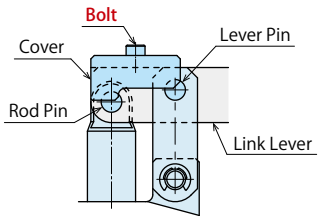

4) Speed Adjustment

- Adjust the speed so that the total operating time is one second or more. If the clamp operates too fast the parts will wear out leading to premature damage and ultimately complete equipment failure.
- Please make sure to release air from the circuit before adjusting speed. It will be difficult to adjust the speed accurately with air mixed in the circuit.
- Turn the speed control valve gradually from the low-speed side (small flow) to the high-speed side (large flow) to adjust the speed.

※ Please refer to P.60 for common cautions.
・Installation Notes ・Hydraulic Fluid List ・Notes on Hydraulic Cylinder Speed Control Circuit
・Notes on Handling ・Maintenance/Inspection ・Warranty

Speed Control Valve (For Low Pressure)

Directly Mounted to Clamps

Speed Control Valve (model BZL) is directly mounted to hydraulic clamps with piping method: type C.

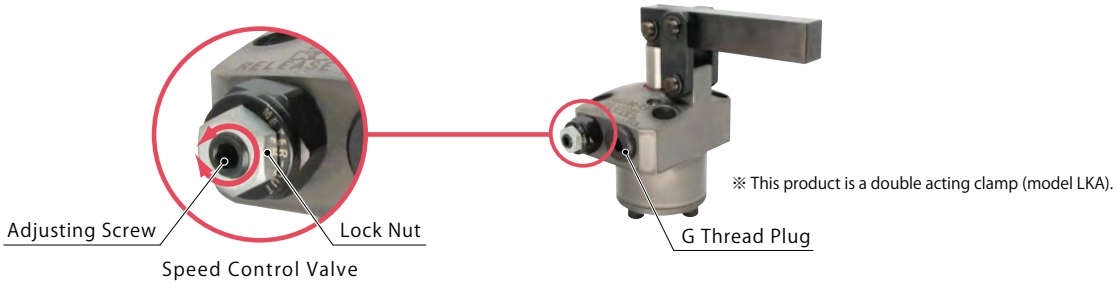

Action Description

Adjust the flow by wrench.
Able to adjust the clamping action speed individually.

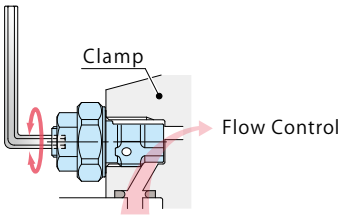

Able to bleed the air in the circuit by loosening the Speed Control Valve.

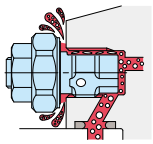

Model No. Indication (Speed Control Valve for Low Pressure)

BZL 0 10 0 - B

1 2 3

1 G Thread Size

10 : Thread Part G1/8A Thread
20 : Thread Part G1/4A Thread

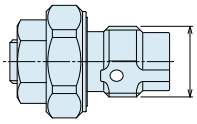

2 Design No.

0 : Revision Number

3 Control Method

B : Meter-out (Recommended※1)
A : Meter-in

B

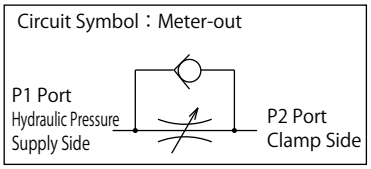

A

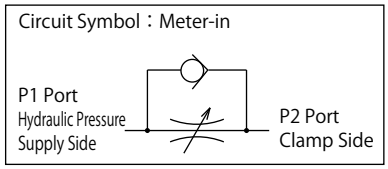

※1. Flow control circuit for double action cylinder should have meter-out circuits for both the lock and release sides (except model LKE/TLA/TMA). Meter-in circuits can be adversely affected by any air in the system.

Specifications

Model No.		BZL0100-B	BZL0200-B	BZL0100-A	BZL0200-A
Max. Operating Pressure	MPa	7			
Withstanding Pressure	MPa	10.5			
Control Method		**Meter-out**		**Meter-in**	
G Thread Size		G1/8A	G1/4A	G1/8A	G1/4A
Cracking Pressure	MPa	0.12		0.04	
Max. Passage Area	mm^2	2.6	5.0	2.6	5.0
Usable Fluid	℃	0 ～ 70			
Operating Temperature		General Hydraulic Oil Equivalent to ISO-VG-32			
Tightening Torque for Main Body	N･m	10	25	10	25

Notes :
1. Minimum passage area when fully opened is the same as the maximum passage area in the table above.
2. It must be mounted with recommended torque. Because of the structure of the metal seal, if mounting torque is insufficient, the flow control valve may not be able to adjust the flow rate.
3. Do not attach a used BZL to other clamps. Flow control may not be done because the bottom depth difference of G thread makes metal sealing insufficient.

Applicable Products

Model No.	LHV (Double Action) Swing Clamp	LKV (Double Action) Link Clamp	LLV (Double Action) Lift Cylinder
BZL0100-B	LHV0400-C□E-□ LHV0480-C□E-□ LHV0550-C□E-□	LKV0400-C□E-□ LKV0480-C□E-□ LKV0550-C□E-□	LLV0360-C□E-□ LLV0400-C□E-□ LLV0480-C□E-□
BZL0100-A	(LHV0400-C□E-□) (LHV0480-C□E-□) (LHV0550-C□E-□)	(LKV0400-C□E-□) (LKV0480-C□E-□) (LKV0550-C□E-□)	(LLV0360-C□E-□) (LLV0400-C□E-□) (LLV0480-C□E-□)
BZL0200-B	LHV0650-C□E-□ LHV0750-C□E-□	LKV0650-C□E-□ LKV0750-C□E-□	
BZL0200-A	(LHV0650-C□E-□) (LHV0750-C□E-□)	(LKV0650-C□E-□) (LKV0750-C□E-□)	

Flow Rate Graph ＜Hydraulic Fluids ISO-VG32（25～35℃）＞

BZL0100-B：Meter-out

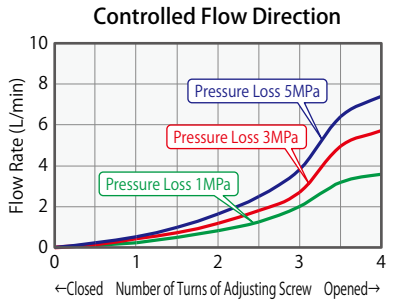

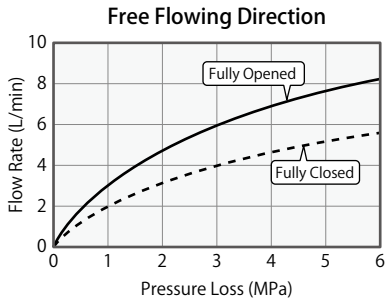

BZL0200-B：Meter-out

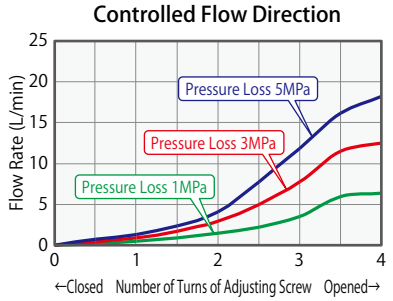

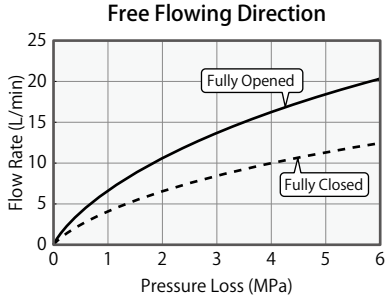

BZL0100-A：Meter-in

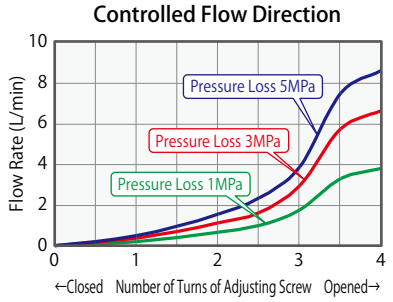

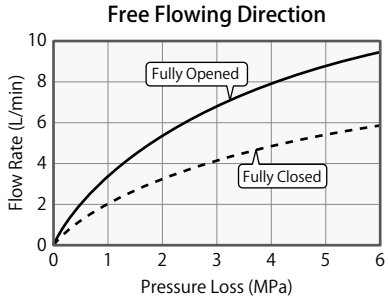

BZL0200-A：Meter-in

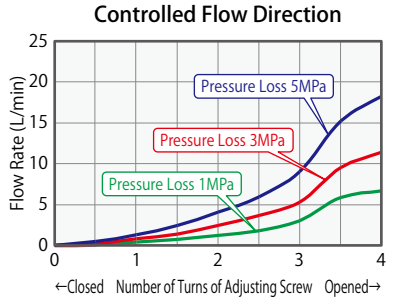

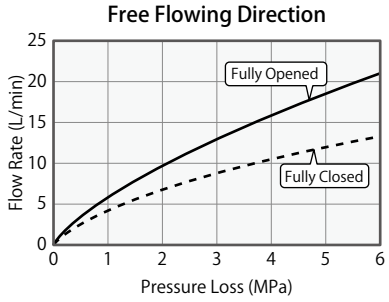

External Dimensions

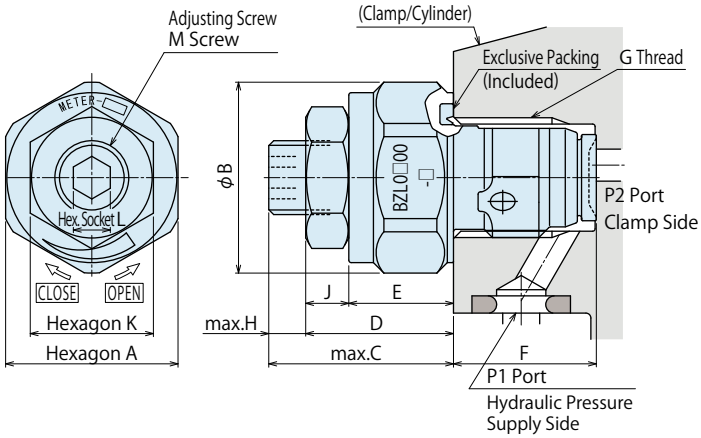

(mm)

Model No.	BZL0100-□	BZL0200-□
A	14	18
B	15.5	20
C	15	16
D	12	13
E	8.5	9.5
F	(11.6)	(15.1)
G	G1/8	G1/4
H	3	3
J	3.5	3.5
K	10	10
L	3	3
M	M6×0.75	M6×0.75

Notes

1. Please read "Notes on Hydraulic Cylinder Speed Control Circuit" to assist with proper hydraulic circuit design.
   If there is something wrong with the circuit design, it leads to the applications malfunction and damage. (Refer to P.60)
2. It is dangerous to bleed air under high pressure. It must be done under lower pressure.
   (For reference: the minimum operating range of the product within the circuit.)
3. Flow control circuit for double action cylinder should have meter-out circuits for both the lock and release sides (except model LKE/TLA/TMA). Meter-in circuits can be adversely affected by any air in the system.

Cautions

Installation Notes (For Hydraulic Series)

1) Check the Usable Fluid

- Please use the appropriate fluid by referring to the Hydraulic Fluid List.

2) Procedure before Piping

- The pipeline, piping connector and fixture circuits should be cleaned by thorough flushing.
- The dust and cutting chips in the circuit may lead to fluid leakage and malfunction.
- There is no filter provided with Kosmek's product except for a part of valves which prevent foreign materials and contaminants from getting into the circuit.

3) Applying Sealing Tape

- Wrap with tape 1 to 2 times following the screw direction.
- Pieces of the sealing tape can lead to oil leakage and malfunction.
- In order to prevent a foreign substance from going into the product during the piping work, it should be carefully cleaned before working.

4) Air Bleeding of the Hydraulic Circuit

- If the hydraulic circuit has excessive air, the action time may become very long. If air enters the circuit after connecting the hydraulic port or under the condition of no air in the oil tank, please perform the following steps.

① Reduce hydraulic pressure to less than 2MPa.
② Loosen the cap nut of pipe fitting closest to the clamp, cylinder, work support, etc. by one full turn.
③ Wiggle the pipeline to loosen the outlet of pipe fitting. Hydraulic fluid mixed with air comes out.

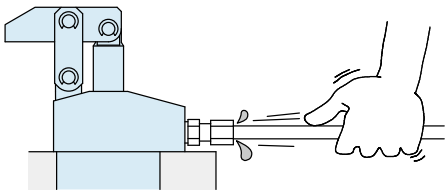

④ Tighten the cap nut after bleeding.
⑤ It is more effective to bleed air at the highest point inside the circuit or at the end of the circuit.
(Set an air bleeding valve at the highest point inside the circuit.)

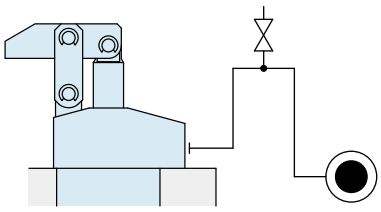

5) Checking Looseness and Retightening

- At the beginning of the product installation, the bolt and nut may be tightened lightly. Check the looseness and re-tighten as required.

Hydraulic Fluid List

ISO Viscosity Grade ISO-VG-32

Maker	Anti-Wear Hydraulic Oil	Multi-Purpose Hydraulic Oil
Showa Shell Sekiyu	Tellus S2 M 32	Morlina S2 B 32
Idemitsu Kosan	Daphne Hydraulic Fluid 32	Daphne Super Multi Oil 32
JX Nippon Oil & Energy	Super Hyrando 32	Super Mulpus DX 32
Cosmo Oil	Cosmo Hydro AW32	Cosmo New Mighty Super 32
ExxonMobil	Mobil DTE 24	Mobil DTE 24 Light
Matsumura Oil	Hydol AW-32	
Castrol	Hyspin AWS 32	

Note As it may be difficult to purchase the products as shown in the table from overseas, please contact the respective manufacturer.

Notes on Hydraulic Cylinder Speed Control Unit

Please pay attention to the cautions below. Design the hydraulic circuit for controlling the action speed of hydraulic cylinder. Improper circuit design may lead to malfunctions and damages. Please review the circuit design in advance.

Speed Control Circuit for Single Acting Cylinder

For spring return single acting cylinders, restricting flow during release can extremely slow down or disturb release action. The preferred method is to control the flow during the lock action only. It is also preferred to provide a flow control valve at each actuator which has limited action speed (swing clamp, hydraulic compact cylinder, etc.)

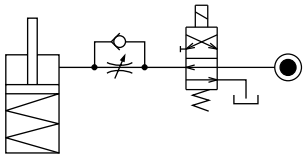

If the cylinder may be damaged by the load from the releasing action direction, provide the flow control valve to the releasing side as well. (Provide the flow control valve to the releasing side if the lever weight is applied during release action.)

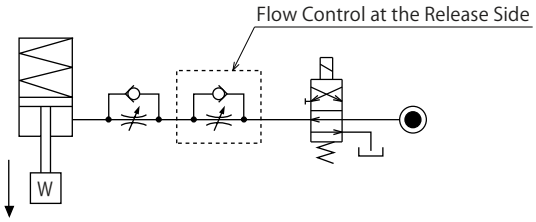

Speed Control Circuit for Double Acting Cylinder

Speed control circuit for double action cylinder should have meter-out circuits for both the lock and release sides (except model LKE/TLA/TMA). Meter-in circuits can be adversely affected by any air in the system. However, in the case of controlling LKE, TMA, TLA, both lock side and release side should be meter-in circuit.
For TMA and TLA, if meter-out circuit is used, abnormal high pressure is created, which causes oil leakage and damage.

【Meter-out Circuit】(Except LKE/TMA/TLA)

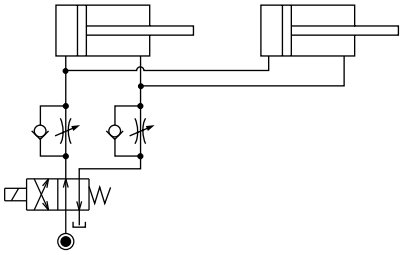

【Meter-in Circuit】(LKE/TMA/TLA must be controlled with meter-in.)

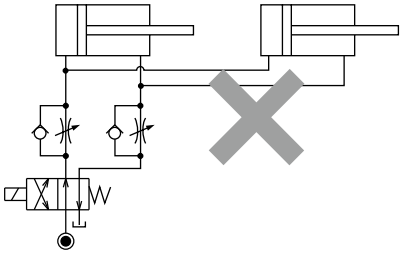

In the case of meter-out circuit, the hydraulic circuit should be designed with the following points.

① Single acting components should not be used in the same flow control circuit as the double acting components.
The release action of the single acting cylinders may become erratic or very slow.

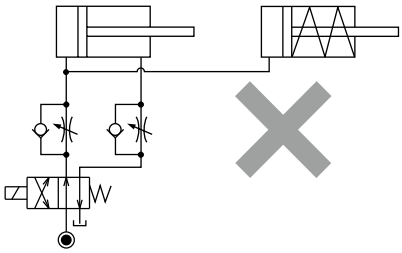

Refer to the following circuit when both the single acting cylinder and double acting cylinder are used together.

○ Separate the control circuit.

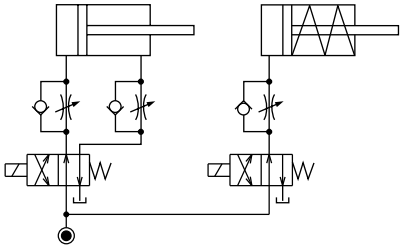

○ Reduce the influence of double acting cylinder control unit.
However, due to the back pressure in tank line, single acting cylinder is activated after double acting cylinder works.

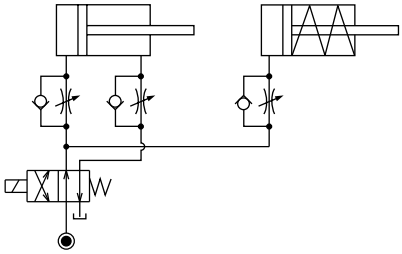

② In the case of meter-out circuit, the inner circuit pressure may increase during the cylinder action because of the fluid supply. The increase of the inner circuit pressure can be prevented by reducing the supplied fluid beforehand via the flow control valve. Especially when using sequence valve or pressure switches for clamping detection. If the back pressure is more than the set pressure then the system will not work as it is designed to.

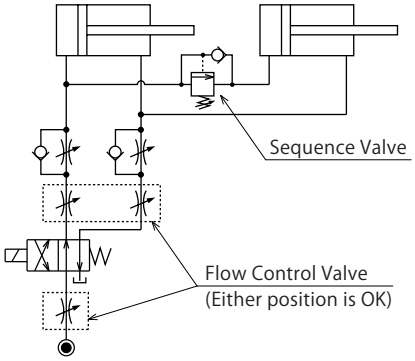

Cautions

Notes on Handling

1) It should be handled by qualified personnel.
- The hydraulic machine and air compressor should be handled and maintained by qualified personnel.

2) Do not handle or remove the product unless the safety protocols are ensured.
① The machine and equipment can only be inspected or prepared when it is confirmed that the preventive devices are in place.
② Before the product is removed, make sure that the above-mentioned safety measures are in place. Shut off the pressure and power source, and make sure no pressure exists in the air and hydraulic circuits.
③ After stopping the product, do not remove until the temperature cools down.
④ Make sure there is no abnormality in the bolts and respective parts before restarting the machine or equipment.

3) Do not touch clamp (cylinder) while clamp (cylinder) is working. Otherwise, your hands may be injured due to clinching.

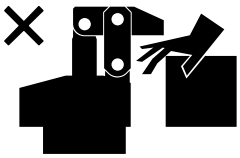

4) Do not disassemble or modify.
- If the equipment is taken apart or modified, the warranty will be voided even within the warranty period.

Maintenance and Inspection

1) Removal of the Product and Shut-off of Pressure Source
- Before the product is removed, make sure that safety measures and preventive devices are in place. Shut off the pressure and power source, and make sure no pressure exists in the air and hydraulic circuits.
- Make sure there is no abnormality in the bolts and respective parts before restarting.

2) Regularly clean the area around the piston rod and plunger.
- If it is used when the surface is contaminated with dirt, it may lead to packing seal damage, malfunctioning, fluid leakage and air leaks.

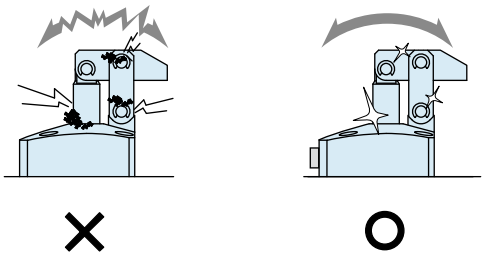

3) If disconnecting by couplers, air bleeding should be carried out on a regular basis to avoid air mixed in the circuit.

4) Regularly tighten piping, mounting bolts, snap rings and cylinders to ensure proper use.

5) Make sure the hydraulic fluid has not deteriorated.

6) Make sure there is smooth action and no abnormal noise.
- Especially when it is restarted after left unused for a long period, make sure it can be operated properly.

7) The products should be stored in the cool and dark place without direct sunshine or moisture.

8) Please contact us for overhaul and repair.

Warranty

1) Warranty Period

- The product warranty period is 18 months from shipment from our factory or 12 months from initial use, whichever is earlier.

2) Warranty Scope

- If the product is damaged or malfunctions during the warranty period due to faulty design, materials or workmanship, we will replace or repair the defective part at our expense.
  Defects or failures caused by the following are not covered.

① If the stipulated maintenance and inspection are not carried out.
② If the product is used while it is not suitable for use based on the operator's judgment, resulting in defect.
③ If it is used or handled in inappropriate way by the operator.
(Including damage caused by the misconduct of the third party.)
④ If the defect is caused by reasons other than our responsibility.
⑤ If repair or modifications are carried out by anyone other than Kosmek, or without our approval and confirmation, it will void warranty.
⑥ Other caused by natural disasters or calamities not attributable to our company.
⑦ Parts or replacement expenses due to parts consumption and deterioration.
(Such as rubber, plastic, seal material and some electric components.)

Damages excluding from direct result of a product defect shall be excluded from the warranty.

KOSMEK
Harmony in Innovation

KOSMEK LTD.

http://www.kosmek.com/

HEAD OFFICE 1-5, 2-chome, Murotani, Nishi-ku, Kobe-city, Hyogo, Japan 651-2241
TEL.+81-78-991-5162 FAX.+81-78-991-8787

BRANCH OFFICE
United States of America
KOSMEK (U.S.A.) LTD.
650 Springer Drive, Lombard, IL 60148 USA
TEL. +1-630-620-7650 FAX. +1-630-620-9015

MEXICO
REPRESENTATIVE OFFICE
KOSMEK USA Mexico Office
Blvd Jurica la Campana 1040, B Colonia Punta Juriquilla Queretaro,
QRO 76230 Mexico TEL. +52-442-161-2347

BRANCH OFFICE
EUROPE
KOSMEK EUROPE GmbH
Schleppeplatz 2 9020 Klagenfurt am Wörthersee Austria
TEL. +43-463-287587 FAX. +43-463-287587-20

BRANCH OFFICE
INDIA
KOSMEK LTD. - INDIA
F 203, Level-2, First Floor, Prestige Center Point, Cunningham Road,
Bangalore -560052 India TEL.+91-9880561695

THAILAND
REPRESENTATIVE OFFICE
KOSMEK Thailand Representation Office
67 Soi 58, RAMA 9 Rd., Suanluang, Suanluang, Bangkok 10250, Thailand
TEL. +66-2-300-5132 FAX. +66-2-300-5133

- For Further Information on Unlisted Specifications and Sizes, Please call us.
- Specifications in this Leaflet are Subject to Change without Notice.

ISO 9001
JQA-QMA10823
KOSMEK HEAD OFFICE

MS
JAB
CM009

CAT.NO. SBR-LHV001-01-GB
Printed in Japan

2019/1 First 2Ry