New

Standard Side Clamp / High-Power Side Clamp

Powerful Clamping from the Side

Model LSA
Standard Side Clamp

Model LSE
High-Power Side Clamp

KOSMEK
Harmony in Innovation

Standard Side Clamp

Model LSA

Powerful Side Clamp

Specialized for Side Push

Alternative solution when traditional clamp is causing tooling clearance issue.

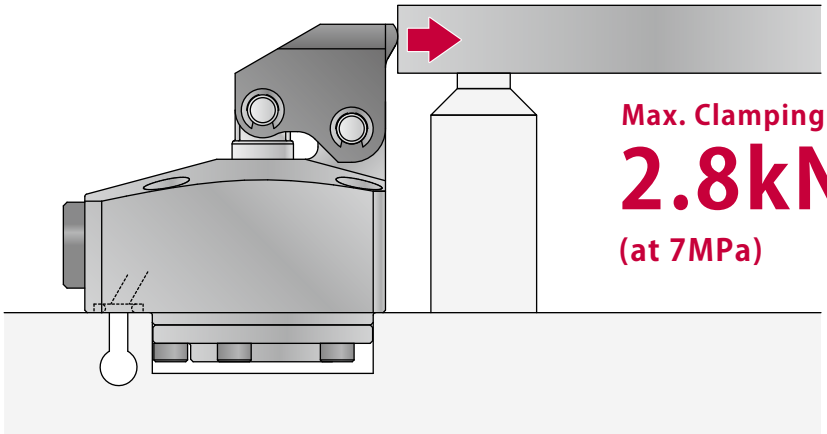

Max. Clamping Force

2.8kN

(at 7MPa)

Direct Mount Speed Control Valve

Speed control valve with air bleeding function can be directly mounted to the product. (Speed control valve is sold separately.)

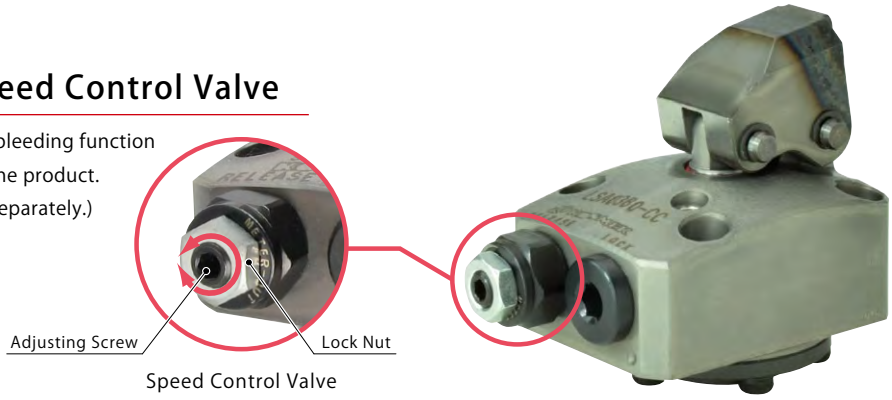

Speed Control Valve

Features

Workpiece Single Side Clamping

Clamps the side of the workpiece.

Released State

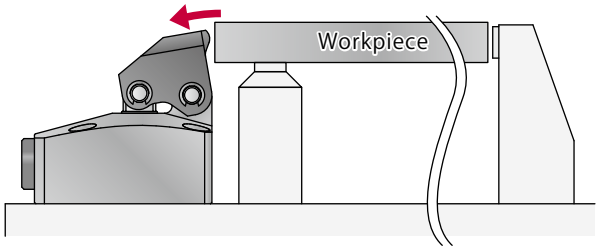

For Workpieces with No Clamping Space

Even if a workpiece has no clamping space, the side of the workpiece can be clamped and fixed.

Locked State

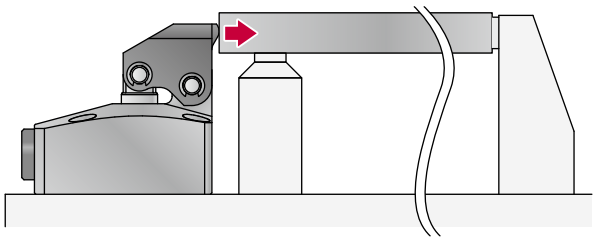

The Same Mounting Dimensions with Swing Clamps and Link Clamps

Side Clamp has the same mounting hole dimensions with Swing Clamps (model：LHA, etc.) and Link Clamps (model：LKA, etc.).

Zero Top Side Interference

There are no interfering objects on the top surface by clamping the workpiece from the side. Machining of the top surface of the workpiece becomes easier.

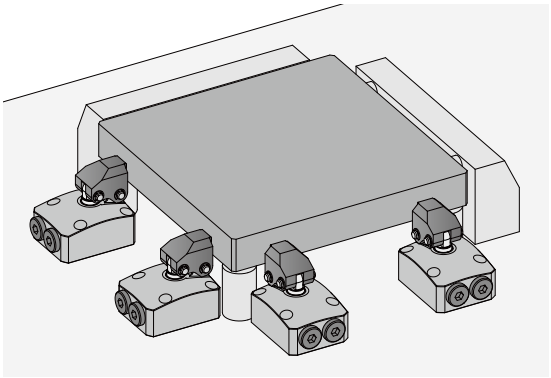

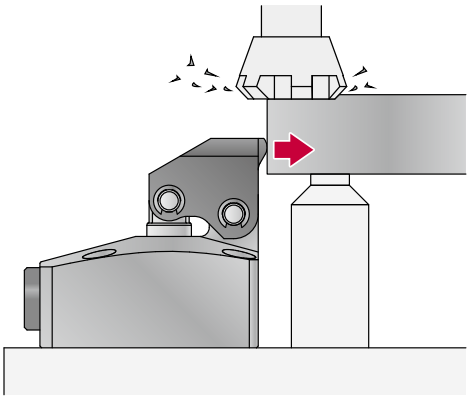

Model No. Indication

LSA 036 0 - C R

1 2 3 4

1 Body Size

036： φD=36mm

※ Indicates the cylinder outer diameter (φD).

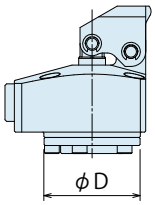

2 Design No.

0 ：Revision Number

3 Piping Method

C ：Gasket Option (with G Thread Plug)

※ Speed control valve (BZL) is sold separately.
Please refer to P.13.

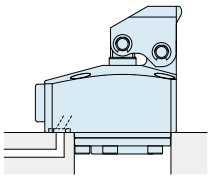

With G Thread Plug
Able to Attach BZL Speed Control Valve

4 Lever Direction

L ：Left

C ：Center

R ：Right

※ The images show the lever direction when the piping port is placed in front of you.

L

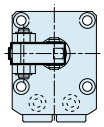

C

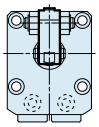

R

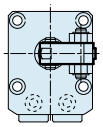

Specifications

Model No.			LSA0360-C□
Cylinder Area		cm^2	4.524
Full Stroke		mm	3.5
Lock Stroke		mm	2.5
Extra Stroke		mm	1
Cylinder Capacity	Lock	cm^3	1.6
	Release	cm^3	1.3
Max. Operating Pressure		MPa	7.0
Min. Operating Pressure		MPa	0.5
Withstanding Pressure		MPa	10.5
Operating Temperature		℃	0 ~ 70
Usable Fluid			General Hyd. Oil Equivalent to ISO-VG-32
Weight		kg	0.5

Clamping Force Curve

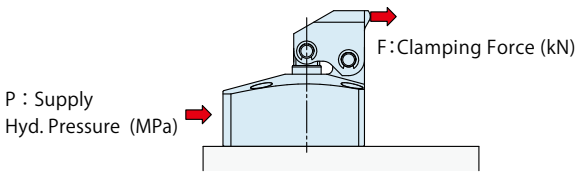

LSE0360

Clamping Force Calculation Formula※1 (kN)	F = 0.394×P

Hydraulic Pressure (MPa)	Clamping Force (kN)
7.0	2.76
6.5	2.56
6.0	2.36
5.5	2.17
5.0	1.97
4.5	1.77
4.0	1.46
3.5	1.38
3.0	1.18
2.5	0.99
2.0	0.79
1.5	0.59
1.0	0.39
0.5	0.20

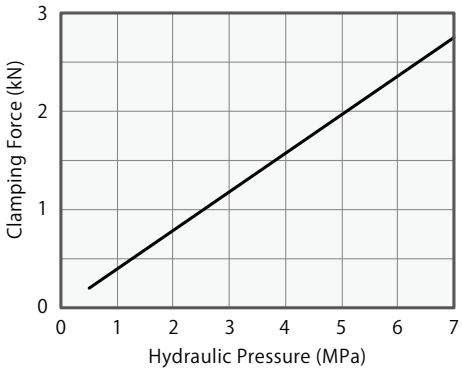

Notes :
1. The graph shows the relationship between the clamping force (kN) and supply hydraulic pressure (MPa).
2. Supplying hydraulic pressure exceeding the operating pressure range may cause damage and fluid leakage.

※1. F : Clamping Force (kN), P : Supply Hydraulic Pressure (MPa).

External Dimensions

※ The drawing shows the clamped state of LSA0360-CC.
(–CL, –CR：Only the mounting direction of the lever is different.)

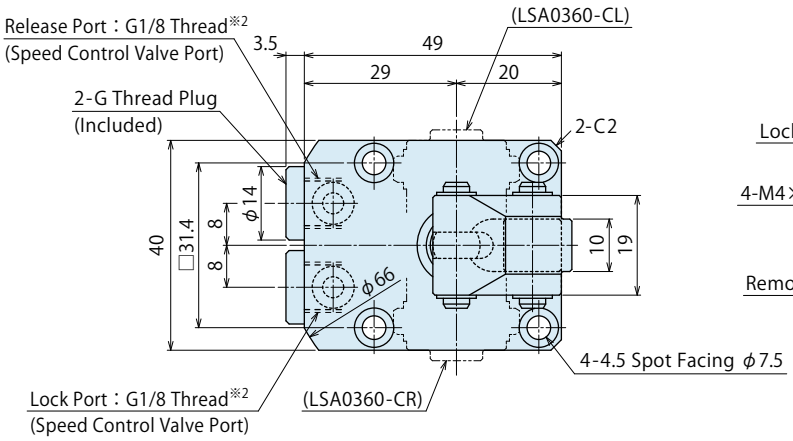

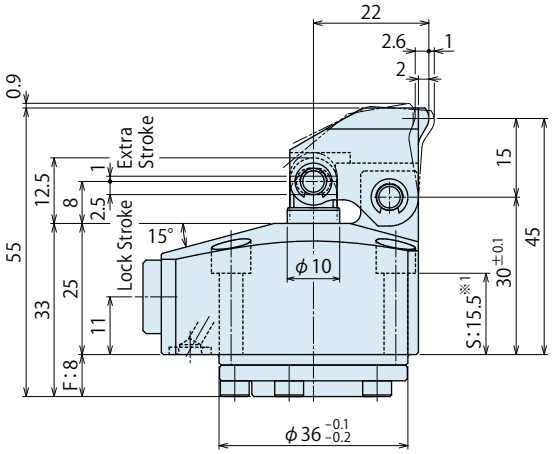

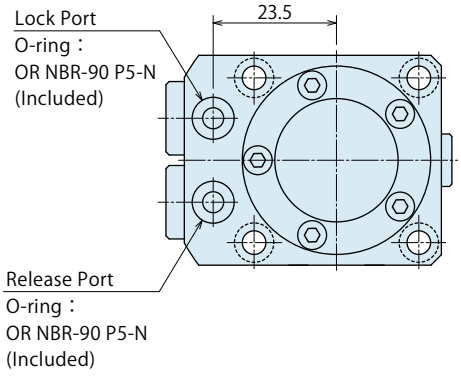

Machining Dimensions of Mounting Area

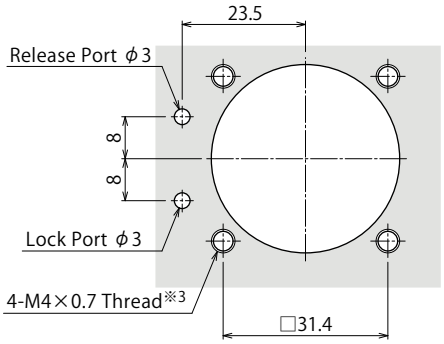

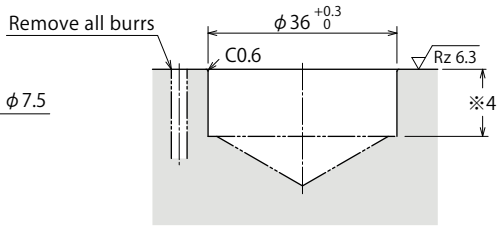

Notes :

※3. M4×0.7 tapping depth of the mounting bolt should be decided according to the mounting height referring to dimension 'S：15.5'.

※4. The depth of the mounting hole ϕ36 +0.3 0 should be decided according to the mounting height referring to the dimension 'F：8'.

Notes :

※1. Mounting bolts are not provided with the product.
Please prepare them according to the mounting height referring to dimension 'S：15.5'.

※2. Speed control valve is sold separately. Please refer to P.13 for detail.

Cautions

Notes for Design

1) Check Specifications
- Please use each product according to the specifications.

2) Notes for Circuit Design
- Please read "Notes on Hydraulic Cylinder Speed Control Unit" for proper hydraulic circuit design. Improper circuit design may lead to malfunctions and damages. (Refer to P.16.)
- Ensure there is no possibility of supplying hydraulic pressure to the lock and release ports simultaneously.

3) Protect the exposed area of the piston rod when using on a welding fixture.
- If spatter attaches to the sliding surface it could lead to malfunction and fluid leakage.

4) When using in a dry environment.
- The link pin can be dried out.
  Grease it periodically or use a special pin.
  Contact us for the specifications for special pins.

Installation Notes

1) Check the Usable Fluid
- Please use the appropriate fluid by referring to the Hydraulic Fluid List (P.15).

2) Installation of the Product
- When mounting the clamp, use hexagonal socket bolts as multiple bolt holes for mounting (with tensile strength of 12.9) and tighten them with the torque shown in the table below. Tightening with greater torque than recommended can dent the seating surface or break the bolt.

Model No.	Mounting Bolt Size	Tightening Torque (N·m)
LSA0360-C□	M4×0.7	4.0

3) Installation / Removal of the Link Lever
- When inserting the link pin, do not hit the pin directly with a hammer. When using a hammer to insert the pin, always use a cover plate with a smaller diameter than the snap ring groove on the pin.

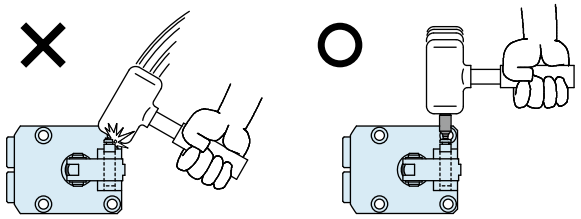

4) Speed Adjustment
- Please make sure to release air from the circuit before adjusting speed. It will be difficult to adjust the speed accurately with air mixed in the circuit.
- Turn the speed control valve gradually from the low-speed side (small flow) to the high-speed side (large flow) to adjust the speed.

※ Please refer to P.15 for common cautions.
・Installation Notes ・Hydraulic Fluid List ・Notes on Hydraulic Cylinder Speed Control Circuit
・Notes on Handling ・Maintenance/Inspection ・Warranty

High-Power Side Clamp

Model LSE

Powerful Side Clamp
Durable for Reaction Force with Holding Force

PAT.

Specialized for Side Push

Alternative solution when traditional clamp is causing tooling clearance issue.

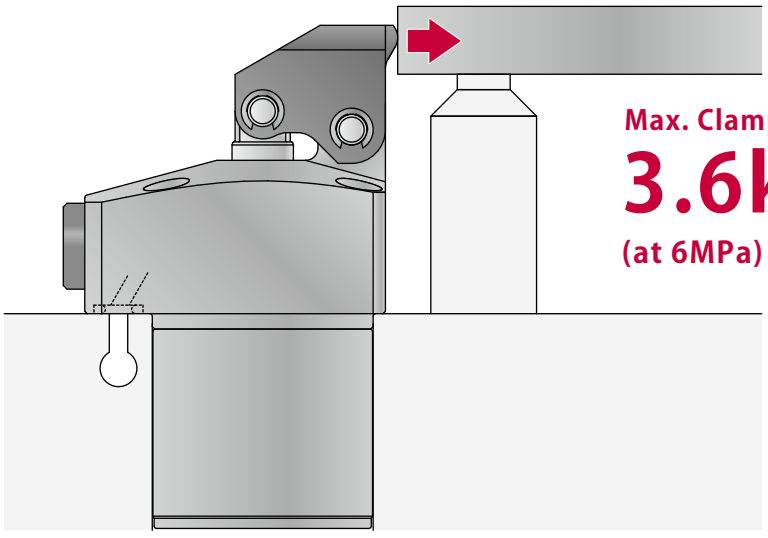

Max. Clamping Force

3.6kN

(at 6MPa)

Direct Mount Speed Control Valve

Speed control valve with air bleeding function can be directly mounted to the product. (Speed control valve is sold separately.)

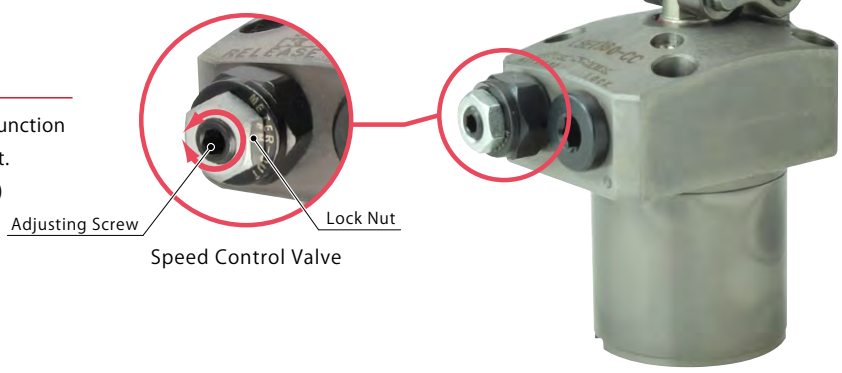

Features

Workpiece Single Side Clamping

Clamps the side of the workpiece.

Released State

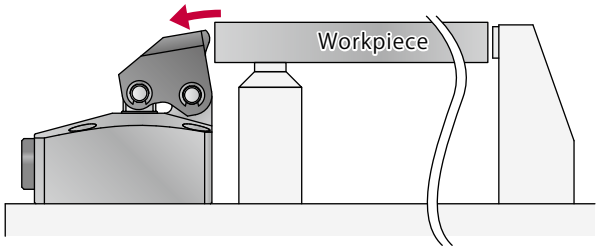

For Workpieces with No Clamping Space

Even if a workpiece has no clamping space, the side of the workpiece can be clamped and fixed.

Locked State

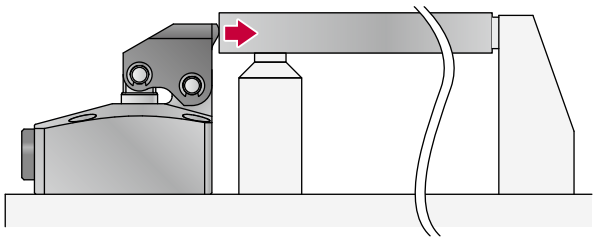

The Same Mounting Dimensions with Swing Clamps and Link Clamps

Side Clamp has the same mounting hole dimensions with Swing Clamps (model：LHA, etc.) and Link Clamps (model：LKA, etc.).

Zero Top Side Interference

There are no interferering objects on the top surface by clamping the workpiece from the side. Machining of the top surface of the workpiece becomes easier.

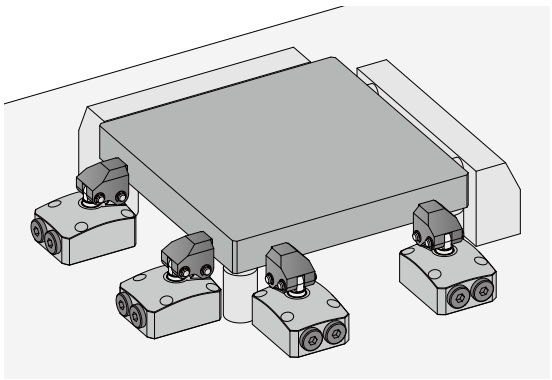

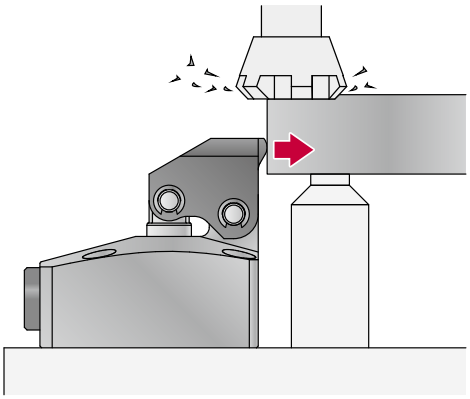

Strong Clamping Force with Mechanical Lock

The mechanical locking and hydraulic pressure enable the LSE model to exert 1.5 times greater clamping force than the same size as the standard side clamp model LSA.

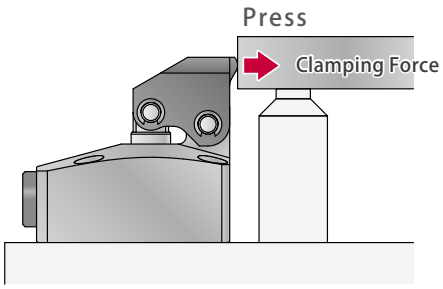

Holding Force

Holding force is the force that endures reaction force (load), not the force that presses a workpiece. The high holding force enables heavy load machining and high-accuracy machining.

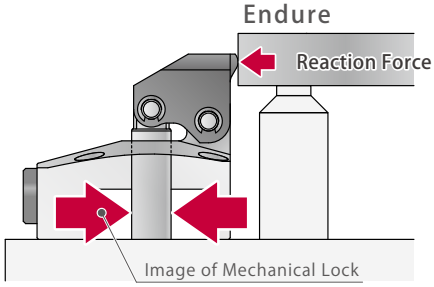

Model No. Indication

LSE 036 0 - C R

1 2 3 4

1 Body Size

036： ϕD=36mm

※ Indicates the cylinder outer diameter (ϕD).

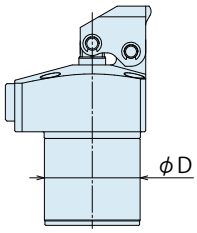

2 Design No.

0 ：Revision Number

3 Piping Method

C ：Gasket Option (with G Thread Plug)

※ Speed control valve (BZL) is sold separately.
Please refer to P.13.

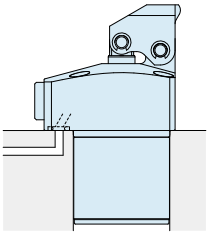

With G Thread Plug
Able to Attach BZL Speed Control Valve

4 Lever Direction

L ：Left

C ：Center

R ：Right

※ The images show the lever direction when the piping port is placed in front of you.

L

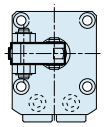

C

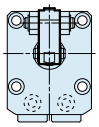

R

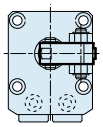

Specifications

Model No.			LSE0360-C□
Full Stroke		mm	3.5
Lock Stroke		mm	2.5
Extra Stroke		mm	1
Cylinder Capacity	Lock	cm³	3.2
	Release	cm³	3.0
Max. Operating Pressure		MPa	6.0
Min. Operating Pressure		MPa	0.5
Withstanding Pressure		MPa	9.0
Operating Temperature		℃	0 ~ 70
Usable Fluid			General Hyd. Oil Equivalent to ISO-VG-32
Weight		kg	0.7

Clamping Force・Holding Force Curve

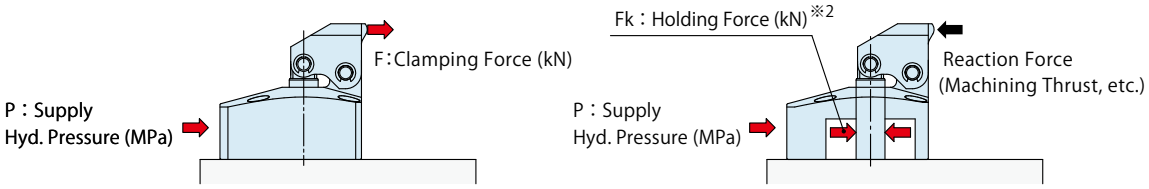

LSE0360

Clamping Force Calculation Formula ※1 (kN)	F = 0.601×P	Holding Force Calculation Formula ※1 (kN)	Fk = 0.953×P (Max. Holding Force is 3.62kN.)

Hydraulic Pressure (MPa)	Clamping Force (kN)	Holding Force (kN)
6.0	3.61	3.62
5.5	3.31	3.62
5.0	3.01	3.62
4.5	2.70	3.62
4.0	2.40	3.62
3.5	2.10	3.34
3.0	1.80	2.86
2.5	1.50	2.38
2.0	1.20	1.90
1.5	0.90	1.43
1.0	0.60	0.95
0.5	0.30	0.48

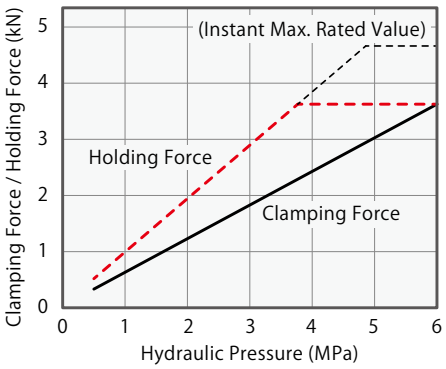

Notes :

1. The graph shows the relationship among the clamping force (kN), holding force (kN) and supply hydraulic pressure (MPa).
2. The clamping force varies depending on the supply hydraulic pressure.
   Set the suitable supply hydraulic pressure according to the clamping force.
3. The reaction force beyond holding force shown in the graph may cause deformation, seizure and fluid leakage, etc.
4. Repetitive use at the range of instant maximum rated value will shorten the product life.
   It should be designed with allowance fully taken into consideration.

※1. F：Clamping Force (kN), Fk：Holding Force (kN), P：Supply Hydraulic Pressure (MPa).

※2. Holding force is the force that counters the reaction force in the clamping state, and differs from clamping force.
Please note that it can produce displacement depending on lever rigidity even if the reaction force is lower than holding force.
(If slight displacement is also not allowed, please keep the reaction force beyond clamping force from being applied.)

External Dimensions

※ The drawing shows the clamped state of LSE0360-CC.
(–CL, –CR：Only the mounting direction of the lever is different.)

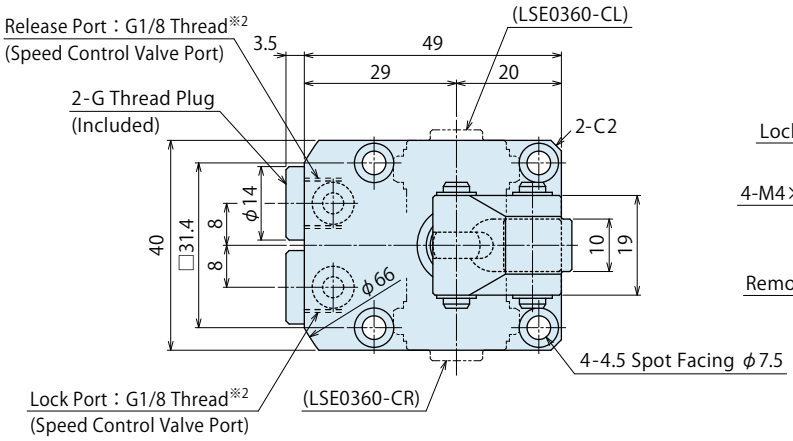

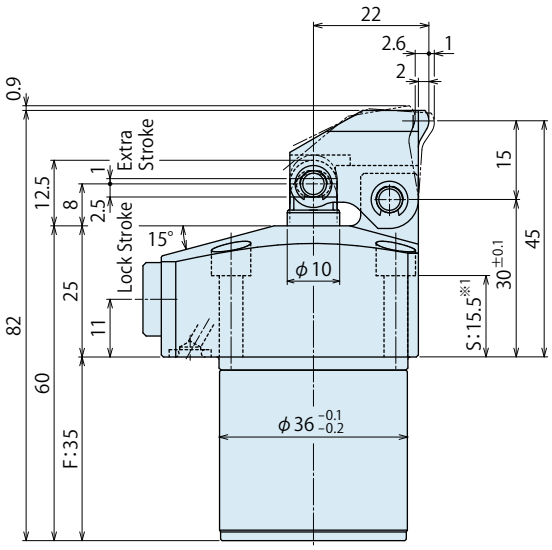

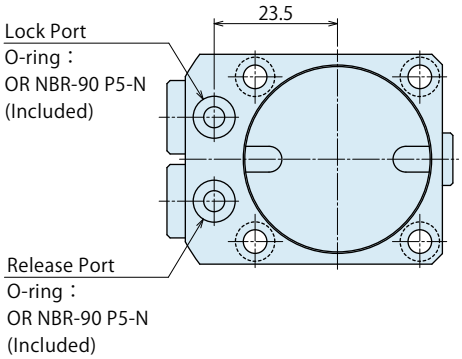

Machining Dimensions of Mounting Area

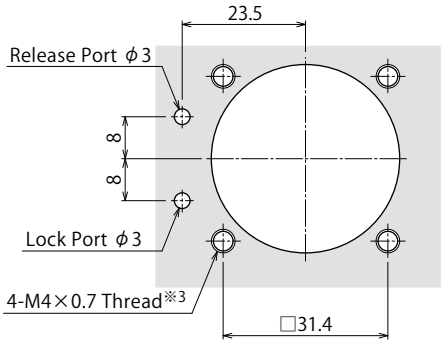

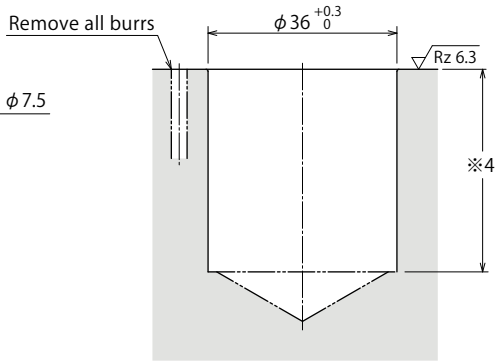

Notes :

※3. M4×0.7 tapping depth of the mounting bolt should be decided according to the mounting height referring to dimension 'S：15.5'.

※4. The depth of the mounting hole ϕ36 $^{+0.3}_{0}$ should be decided according to the mounting height referring to the dimension 'F：35'.

Notes :

※1. Mounting bolts are not provided with the product.
Please prepare them according to the mounting height referring to dimension 'S：15.5'.

※2. Speed control valve is sold separately. Please refer to P.13 for detail.

Cautions

Notes for Design

1) Check Specifications
- Please use each product according to the specifications.

2) Notes for Circuit Design
- Please read "Notes on Hydraulic Cylinder Speed Control Unit" for proper hydraulic circuit design. Improper circuit design may lead to malfunctions and damages. (Refer to P.16.)
- Ensure there is no possibility of supplying hydraulic pressure to the lock and release ports simultaneously.

3) Protect the exposed area of the piston rod when using on a welding fixture.
- If spatter attaches to the sliding surface it could lead to malfunction and fluid leakage.

4) When using in a dry environment.
- The link pin can be dried out.
  Grease it periodically or use a special pin.
  Contact us for the specifications for special pins.

Installation Notes

1) Check the Usable Fluid
- Please use the appropriate fluid by referring to the Hydraulic Fluid List (P.15).

2) Installation of the Product
- When mounting the clamp, use hexagonal socket bolts as multiple bolt holes for mounting (with tensile strength of 12.9) and tighten them with the torque shown in the table below. Tightening with greater torque than recommended can dent the seating surface or break the bolt.

Model No.	Mounting Bolt Size	Tightening Torque (N·m)
LSE0360-C□	M4×0.7	4.0

3) Installation / Removal of the Link Lever
- When inserting the link pin, do not hit the pin directly with a hammer. When using a hammer to insert the pin, always use a cover plate with a smaller diameter than the snap ring groove on the pin.

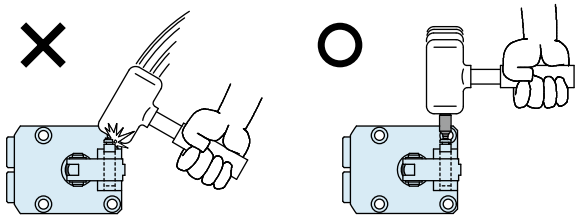

4) Speed Adjustment
- Please make sure to release air from the circuit before adjusting speed. It will be difficult to adjust the speed accurately with air mixed in the circuit.
- Turn the speed control valve gradually from the low-speed side (small flow) to the high-speed side (large flow) to adjust the speed.

※ Please refer to P.15 for common cautions.
・Installation Notes ・Hydraulic Fluid List ・Notes on Hydraulic Cylinder Speed Control Circuit
・Notes on Handling ・Maintenance/Inspection ・Warranty

Model No. Indication (Speed Control Valve for Low Pressure)

BZL 0 10 1 - B

1 2 3

1 G Thread Size

10 : Thread Part G1/8A Thread

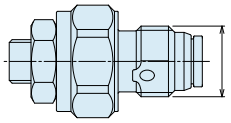

2 Design No.

1 : Revision Number

3 Control Method

B : Meter-out (Recommended※1)

A : Meter-in

B

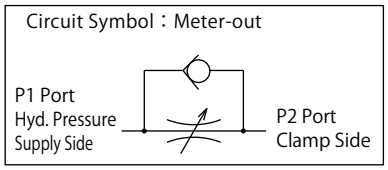

A

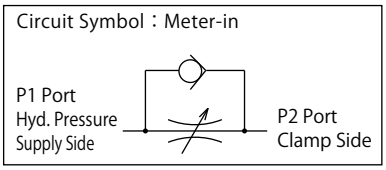

Note : ※1. For the speed control of double acting cylinders (except for LKE/TLA/TMA/TLV/TMV/TTA), it should have meter-out circuits for both the lock and release sides. Meter-in circuits can be adversely affected by any air in the system.

Specifications

Model No.		BZL0101-B	BZL0101-A
Max. Operating Pressure	MPa	7	
Withstanding Pressure	MPa	10.5	
Control Method		**Meter-out**	**Meter-in**
G Thread Size		G1/8A	
Cracking Pressure	MPa	0.12	0.04
Max. Passage Area	mm^2	2.6	
Usable Fluid		General Hydraulic Oil equivalent to ISO-VG-32	
Operating Temperature	℃	0 ~ 70	
Tightening Torque for Main Body	N·m	10	
Weight	g	12	

Notes :

1. It must be mounted with recommended torque. Because of the structure of the metal seal, if mounting torque is insufficient, it may not be able to control the flow rate.
2. Do not attach a used BZL to other clamps. Flow control may not be succeeded because the bottom depth difference of G thread makes metal sealing insufficient.

Applicable Products

Model No.	**LSA** (Double Action) Standard Side Clamp	**LSE** (Double Action) High-Power Side Clamp
BZL0101-B	LSA0360-C-□	LSE0360-C-□
BZL0101-A	(LSA0360-C-□)	(LSE0360-C-□)

Flow Rate Graph ＜Hydraulic Fluids ISO-VG32 (25～35℃)＞

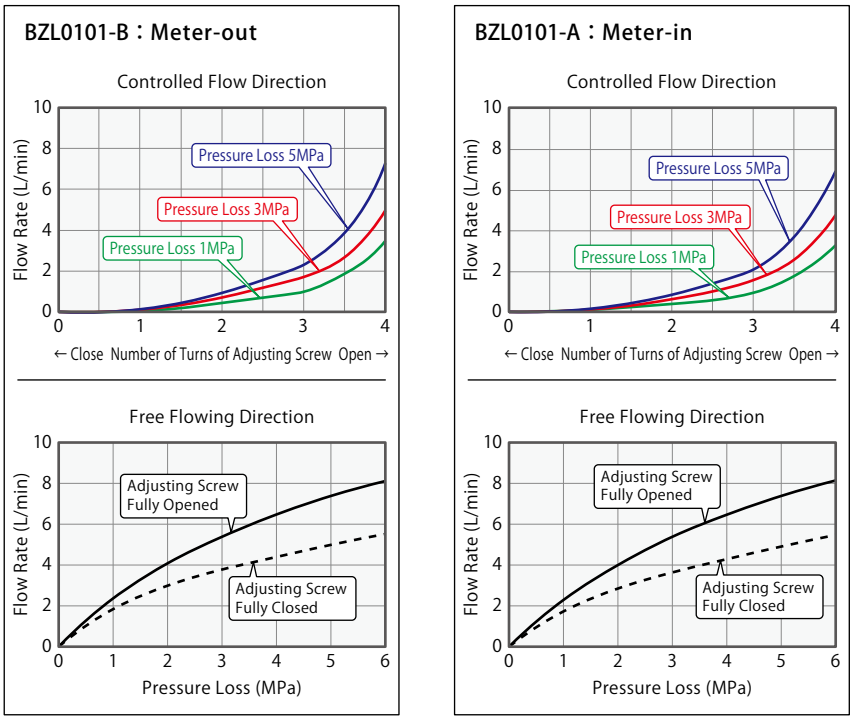

External Dimensions

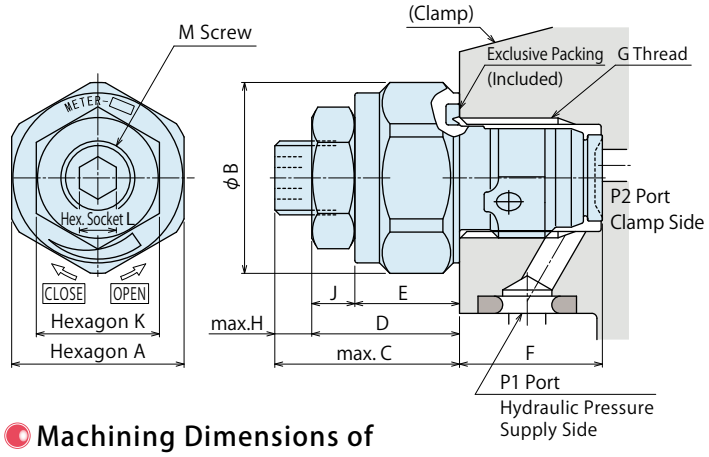

(mm)

Model No.	BZL0101-□
A	14
B	15.5
C	15
D	12
E	8.5
F	(11.6)
G	G1/8
H	3
J	3.5
K	10
L	3
M (Nominal × Pitch)	M6×0.75
N	11.5
P	8.5
Q	9
R (Flat Surface Area)	16
S	10
T	8.7
U	G1/8
V	2～3
W	2.5～5

Machining Dimensions of Mounting Area

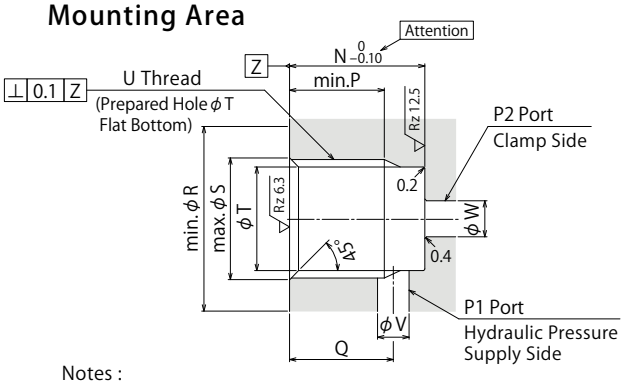

Notes :

1. Since the ▽Rz 6.3 area is sealing part, be careful not to damage it.
2. Since the ▽Rz 12.5 area is the metal sealing part of BZL, be careful not to damage it (especially when deburring).
3. No cutting chips or burr should be at the tolerance part of machining hole.
4. As shown in the drawing, P1 port is used as the hydraulic supply side and P2 port as the clamp side.
5. If mounting plugs or fittings with G thread specification available in the market, the dimension '※1' should be 12.5.

Notes

1. Please read "Notes on Hydraulic Cylinder Speed Control Unit" for proper hydraulic circuit design. Improper circuit design may lead to malfunctions and damages. (Refer to P.16)
2. It is dangerous to release the air under high pressure. It must be done under lower pressure. (For reference : the minimum operating range of the product within the circuit.)

Cautions

Installation Notes (for Hydraulic Series)

1) Check the Usable Fluid

- Please use the appropriate fluid by referring to the Hydraulic Fluid List.

2) Procedure before Piping

- The pipeline, piping connector and fixture circuits should be cleaned by thorough flushing.
- The dust and cutting chips in the circuit may lead to fluid leakage and malfunction.
- There is no filter provided with Kosmek's product except for a part of valves which prevent contamination in the circuit.

3) Applying Sealing Tape

- Wrap with tape 1 to 2 times following the screw direction.
- Pieces of the sealing tape can lead to oil leakage and malfunction.
- Please implement piping construction in a clear environment to prevent anything getting in products.

4) Air Bleeding of the Hydraulic Circuit

- If the hydraulic circuit has excessive air, the action time may become very long. If air enters the circuit after connecting the hydraulic port or under the condition of no air in the oil tank, please perform the following steps.

① Reduce hydraulic pressure to less than 2MPa.
② Loosen the cap nut of pipe fitting closest to the clamp, cylinder, work support, etc. by one full turn.
③ Shake the pipeline to loosen the outlet of pipe fitting. Hydraulic fluid mixed with air comes out.

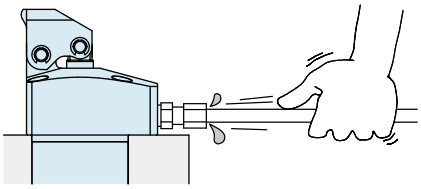

④ Tighten the cap nut after air bleeding.
⑤ It is more effective to release air at the highest point inside the circuit or at the end of the circuit. (For the gasket option, set an air bleeding valve at the highest point inside the circuit.)

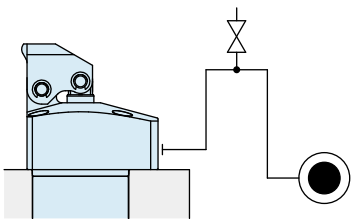

5) Checking Looseness and Retightening

- At the beginning of the product installation, the bolt and nut may be tightened lightly.
  Check the looseness and re-tighten as required.

Hydraulic Fluid List

ISO Viscosity Grade ISO-VG-32

Manufacturer	Anti-Wear Hydraulic Oil	Multi-Purpose Hydraulic Oil
Showa Shell Sekiyu	Tellus S2 M 32	Morlina S2 B 32
Idemitsu Kosan	Daphne Hydraulic Fluid 32	Daphne Super Multi Oil 32
JX Nippon Oil & Energy	Super Hyrando 32	Super Mulpus DX 32
Cosmo Oil	Cosmo Hydro AW32	Cosmo New Mighty Super 32
ExxonMobil	Mobil DTE 24	Mobil DTE 24 Light
Matsumura Oil	Hydol AW-32	
Castrol	Hyspin AWS 32	

Note : Please contact manufacturers when customers require products in the list above.

Notes on Hydraulic Cylinder Speed Control Unit

Please pay attention to the cautions below. Design the hydraulic circuit for controlling the action speed of hydraulic cylinder. Improper circuit design may lead to malfunctions and damages. Please review the circuit design in advance.

Flow Control Circuit for Single Acting Cylinder

For spring return single acting cylinders, restricting flow during release can extremely slow down or disrupt release action. The preferred method is to control the flow during the lock action only using a flow control valve with a check valve.
It is also preferred to provide a flow control valve at each actuator.

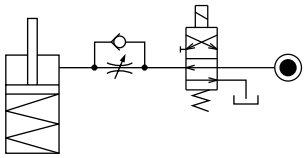

If a load is applied in the direction of release action during release, which may damage the cylinder, use a flow control valve with a check valve to control the flow rate on the release side as well. (This also applies to swing clamps where the lever weight is applied during release.)

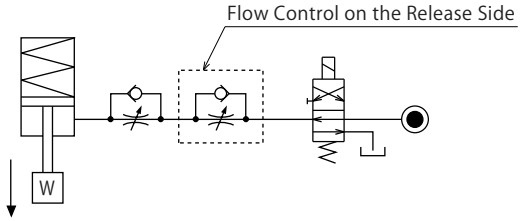

Flow Control Circuit for Double Acting Cylinder

Flow control circuit for double acting cylinder (except LKE/TLA/TMA/TLV/TMV/TTA) should have meter-out circuits for both the lock and release sides. Meter-in control can have adverse effect by presence of air in the system.

【Meter-out Circuit】(Except LKE/TLA/TMA/TLV/TMV/TTA)

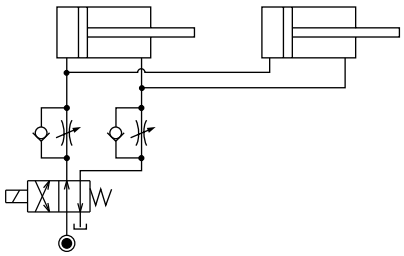

In the case of meter-out circuit, the hydraulic circuit should be designed with the following points.

① Single acting components should not be used in the same flow control circuit as the double acting components.
The release action of the single acting cylinders may become erratic or very slow.

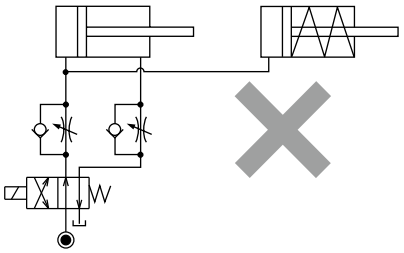

Refer to the following circuit when both the single acting cylinder and double acting cylinder are used together.

○ Separate the control circuit.

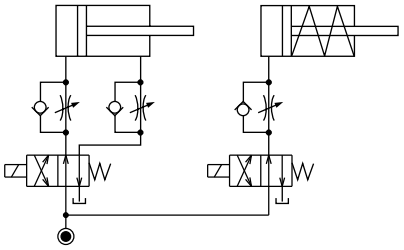

○ Reduce the influence of double acting cylinder control unit. However, due to the back pressure in tank line, single acting cylinder is activated after double acting cylinder works.

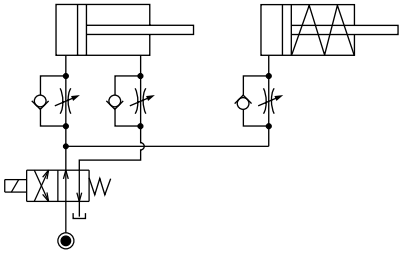

② In the case of meter-out circuit, the inner circuit pressure may increase during the cylinder action because of the fluid supply. The increase of the inner circuit pressure can be prevented by reducing the supplied fluid beforehand via the flow control valve. Especially when using sequence valve or pressure switches for clamping detection. If the back pressure is more than the set pressure then the system will not work as it is designed to.

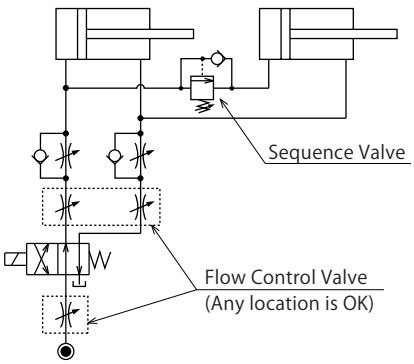

Cautions

Notes on Handling

1) It should be operated by qualified personnel.
- The hydraulic machine and air compressor should be operated and maintained by qualified personnel.

2) Do not operate or remove the product unless the safety protocols are ensured.
① The machine and equipment can only be inspected or prepared when it is confirmed that the safety devices are in place.
② Before the product is removed, make sure that the above-mentioned safety devices are in place. Shut off the pressure and power source, and make sure no pressure exists in the air and hydraulic circuits.
③ After stopping the product, do not remove until the temperature drops.
④ Make sure there is no abnormality in the bolts and respective parts before restarting the machine or equipment.

3) Do not touch the clamp (cylinder) while it is working. Otherwise, your hands may be injured due to clinching.

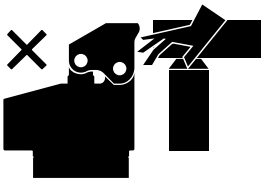

4) Do not disassemble or modify.
- If the equipment is taken apart or modified, the warranty will be voided even within the warranty period.

Maintenance and Inspection

1) Removal of the Product and Shut-off of Pressure Source
- Before the product is removed, make sure that safety devices and preventive devices are in place. Shut off the pressure and power source, and make sure no pressure exists in the air and hydraulic circuits.
- Make sure there is no abnormality in the bolts and respective parts before restarting.

2) Regularly clean the area around the piston rod.
- If it is used when the surface is contaminated with dirt, it may lead to packing seal damage, malfunctioning and fluid leakage.

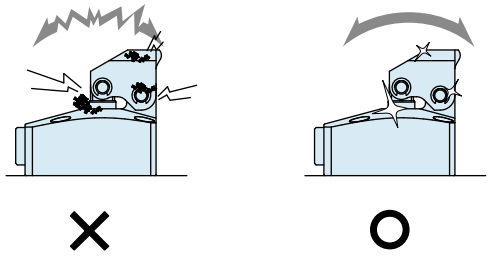

3) If disconnecting by couplers, air bleeding should be carried out on a regular basis to avoid air mixed in the circuit.

4) Regularly tighten pipe, mounting bolt, nut, snap ring, cylinder and others to ensure proper use.

5) Make sure the hydraulic fluid has not deteriorated.

6) Make sure there is a smooth action without an irregular noise.
- Especially when it is restarted after left unused for a long period, make sure it can be operated correctly.

7) The products should be stored in the cool and dark place without direct sunshine or moisture.

8) Please contact us for overhaul and repair.

Warranty

1) Warranty Period

- The product warranty period is 18 months from shipment from our factory or 12 months from initial use, whichever is earlier.

2) Warranty Scope

- If the product is damaged or malfunctions during the warranty period due to faulty design, materials or workmanship, we will replace or repair the defective part at our expense.
  Defects or failures caused by the following are not covered.

① If the stipulated maintenance and inspection are not carried out.
② If the product is used while it is not suitable for use based on the operator's judgment, resulting in defect.
③ If it is used or operated in an inappropriate way by the operator. (Including damage caused by the misconduct of the third party.)
④ If the defect is caused by reasons other than our responsibility.
⑤ If repair or modifications are carried out by anyone other than Kosmek, or without our approval and confirmation, it will void warranty.
⑥ Others caused by natural disasters or calamities not attributable to our company.
⑦ Parts or replacement expenses due to parts consumption and deterioration.
(Such as rubber, plastic, seal material and some electric components.)

Damages excluding from direct result of a product defect shall be excluded from the warranty.

KOSMEK
Harmony in Innovation

KOSMEK LTD.

http://www.kosmek.com/

HEAD OFFICE 1-5, 2-chome, Murotani, Nishi-ku, Kobe-city, Hyogo, Japan 651-2241
TEL.+81-78-991-5162 FAX.+81-78-991-8787

United States of America SUBSIDIARY
KOSMEK (USA) LTD.
650 Springer Drive, Lombard, IL 60148 USA
TEL. +1-630-620-7650 FAX. +1-630-620-9015

MEXICO REPRESENTATIVE OFFICE
KOSMEK USA Mexico Office
Av. Santa Fe 103, Int. 59, col. Santa Fe Juriquilla, Queretaro, QRO, 76230, Mexico TEL. +52-1-55-3044-9983

EUROPE SUBSIDIARY
KOSMEK EUROPE GmbH
Schleppeplatz 2 9020 Klagenfurt am Wörthersee Austria
TEL. +43-463-287587 FAX. +43-463-287587-20

CHINA SUBSIDIARY
KOSMEK (CHINA) LTD.
Room601, RIVERSIDE PYRAMID No.55, Lane21, Pusan Rd, Pudong Shanghai 200125, China TEL. +86-21-54253000

INDIA BRANCH OFFICE
KOSMEK LTD. - INDIA
4A/Old No:649, Ground Floor, 4th D cross, MM Layout, Kavalbyrasandra, RT Nagar, Bangalore -560032 India TEL.+91-9880561695

THAILAND REPRESENTATIVE OFFICE
KOSMEK Thailand Representation Office
67 Soi 58, RAMA 9 Rd., Phatthanakan, Suanluang, Bangkok 10250, Thailand
TEL. +66-2-300-5132 FAX. +66-2-300-5133

- For Further Information on Unlisted Specifications and Sizes, Please call us.
- Specifications in this Leaflet are Subject to Change without Notice.

ISO 9001
JQA-QMA10823
KOSMEK HEAD OFFICE

JAB
MS
CM009

CAT.NO. SBR-LSA001-01-G1B
Printed in Japan

2021/11 First 1Ry